City Council Agenda Item #12_
Meeting of Sept. 16, 2019

Brief Description Items concerning the Hennepin County Medical Examiner's Office Project at 14300 Co. Rd. 62

1) Major amendment to an existing master development plan;

2) Conditional use permit; and

3) Site and building plan review

Recommendation Introduce the ordinance and refer it to the planning commission

Background

Hennepin County is proposing to build a new Medical Examiner's Office on the County Home School (CHS) property located at 14300 Co. Rd 62. The current office is located in downtown Minneapolis. All operations from the downtown facility location would be moved to the Minnetonka site. The Medical Examiner's Office serves Hennepin, Dakota and Scott Counties.

The immediate area has a mix of existing land uses. Glen Lake Golf Course, also owned by Hennepin County, is located to the west. Single-family neighborhoods and Glen Lake are located to the north. To the east and south are industrial uses. Major transportation corridors also define the eastern and southern borders - County Road 62, the Minnesota River Bluffs LRT Regional trail and Soo Line railroad.

The site is zoned Planned Unit Development District and guided as Institutional in the comprehensive plan.

In Feb. 2019, the city council reviewed plans to develop the facility on the "eastern" portion of the CHS property. The council introduced the ordinance, but prior to the planning commission public hearing, the county decided to reconsider site options after staff raised a number of concerns about the access road disturbance, steep slopes, grading impacts and future site development.

"East side" formal plan

"East side" concept plan

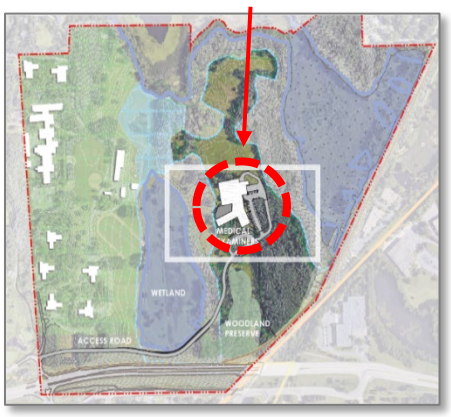

Proposal

"West side" formal plan

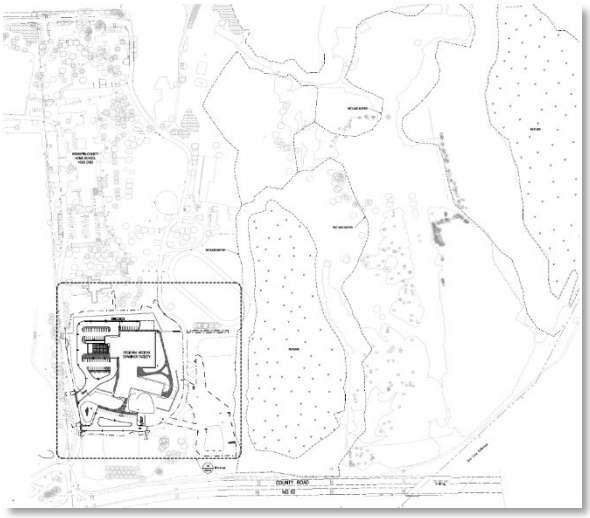

Hennepin County has revisited site development of the CHS site for the Medical Examiner's Office. The new plan proposes to construct a new medical examiner's facility on the west side of the County Home School site (CHS) at 14300 County Road 62. The proposed two-story, 56,000-square-feet building and associated parking are located south of the existing CHS complex, on the site of four existing CHS cottages.

The project will utilize the existing exit road from County Road 62 and the existing north/south access road to enter visitor parking, secured staff parking, and the secured CHS facility. The building would include office, autopsy, and conference spaces. The county anticipates the facility would also serve as a teaching and training facility for students, university faculty, and practitioners. There would not be a crematorium in the building.

The proposal requires the approval of:

1) **Master Development Plan Amendment.** By City Code §300.22 Subd.9, the proposal requires a major amendment to the existing planned unit development, as the proposal: (1) substantially alters the location of buildings and road; and (2) increases the gross floor area of the building by more than 10 percent. Major amendments can only be approved by ordinance.

2) **Conditional Use Permit.** By City Code §300.22 Subd.3, all uses allowed by conditional use permit within any other district are allowed by conditional use permit in a PUD. Public buildings are conditionally-permitted uses in all zoning districts.

3) **Site and Building Plan Review.** By city code, site and building plan review is required for the construction of any non-single-family residential building.

Neighborhood Meeting

The county held a neighborhood meeting on Aug. 13, 2019. There were 11 neighbors in attendance. Unlike the previous "east side" project, there was little discussion about natural resource issues. Most of the questions were specific to current county programs on-site, building and medical practice procedures, lighting, and noise. The county also fielded a question about the future use of the east side which they indicated it would likely stay as is, that there was no plan for future use.

Issue Identification

The purpose of introducing an ordinance is to give the city council the opportunity to review a new application before sending it to the planning commission for a recommendation. Introducing an ordinance does not constitute an approval. The tentative planning commission date is Sept. 19, 2019.

Staff Recommendation

Introduce the ordinance and refer it to the planning commission.

Submitted through:
Geralyn Barone, City Manager
Julie Wischnack, AICP, Community Development Director

Originated by:
Loren Gordon, AICP, City Planner

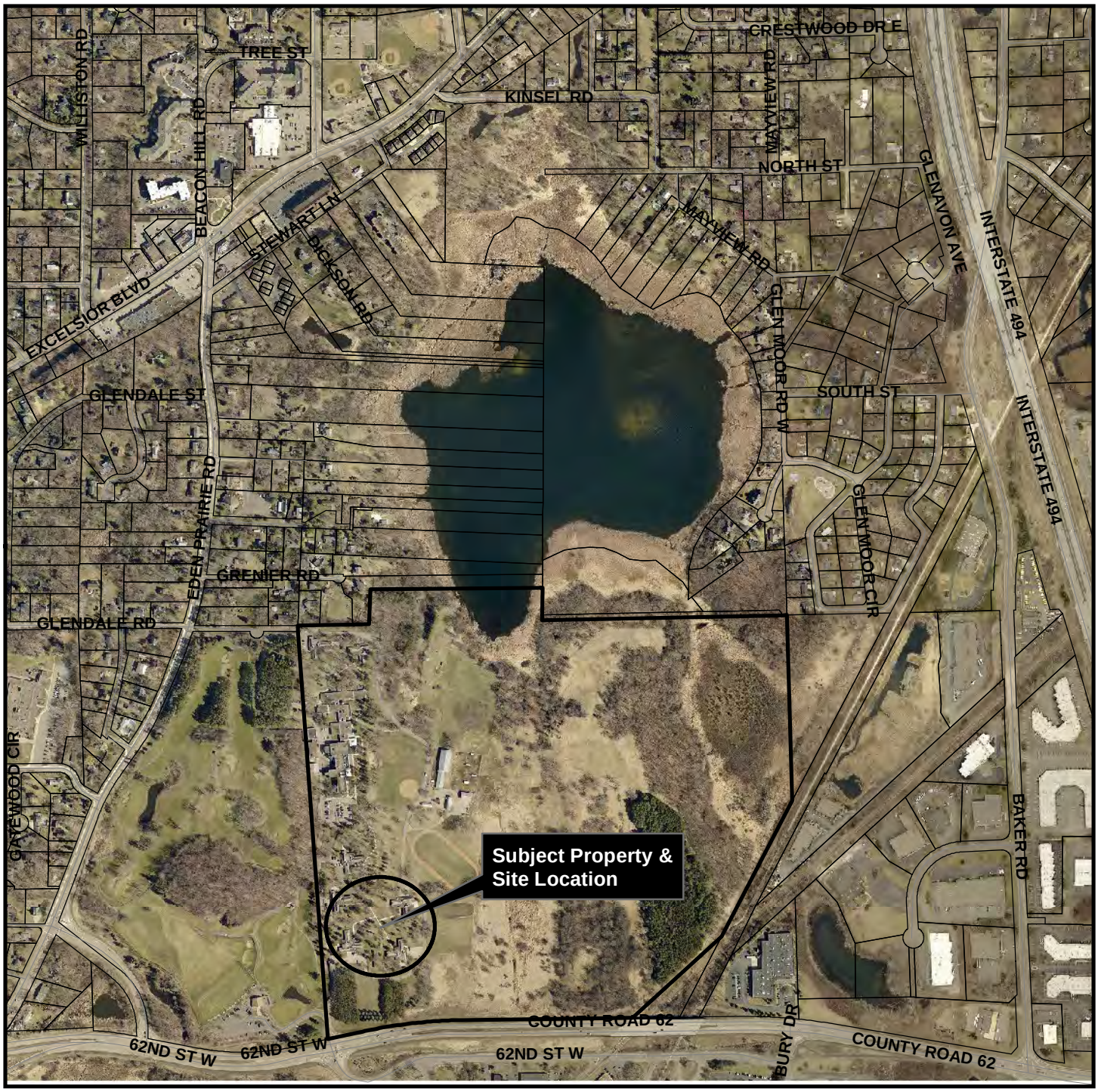

CITY OF MINNETONKA

Location Map

Project: Hennepin County
Medical Examiner's Office
Address: 14300 Co Rd 62

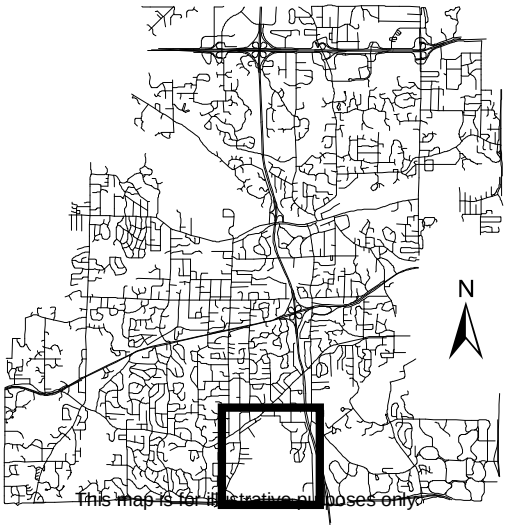

N

HENNEPIN COUNTY MEDICAL EXAMINER FACILITY

MINNETONKA, MN

HENNEPIN COUNTY

A 2208 GOVERNMENT CENTER, MINNEAPOLIS, MN 55415

PROJECT NO. 023-10155-025
07/26/2019
HCME 95% CONSTRUCTION DOCUMENTS

LEO A DALY

PLANNING
ARCHITECTURE
ENGINEERING
INTERIORS

EST. 1915

ABU DHABI
ATLANTA
AUSTIN
CHICAGO
COLLEGE STATION
CORPUS CHRISTI
DALLAS
FLINT
FORT WORTH
HOUSTON
LAN - MONTGOMERY COUNTY
LANSING
LAREDO
LAS VEGAS
LOS ANGELES
MIAMI
MIDWEST
MILPITAS
MINNEAPOLIS
NORMAN
OMAHA
ORANGE
SACRAMENTO
SAN ANTONIO
SAN MARCOS
TAMPA
WACO
WASHINGTON, DC
WEST PALM BEACH

VOLUME 1

HCME 95% CONSTRUCTION DOCUMENTS

A1 OVERALL FLOOR PLAN, LEVEL 1

SCALE: 1/16" = 1'-0"

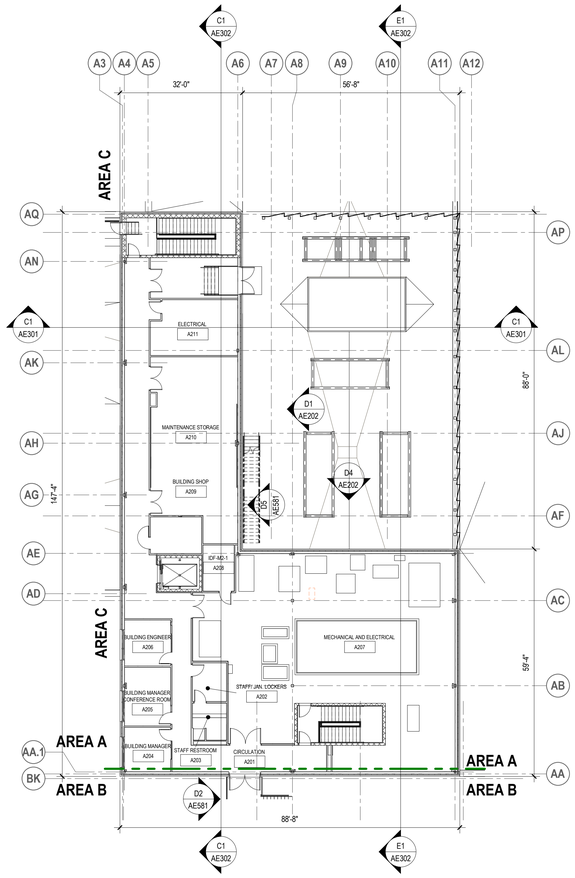

C5 OVERALL FLOOR PLAN, LEVEL 2 (AREA A)

SCALE: 1/16" = 1'-0"

OVERALL PLAN GENERAL NOTES

1. FOR STRUCTURAL GENERAL NOTES - SEE SHEET S001
2. EL. 100'-0" = ELEVATION 961.5 ON CIVIL PLANS
3. (A) INDICATES SPREAD FOOTING TYPE
4. TOP OF FOOTING ELEVATION = 99'-0" UNLESS NOTED THUS: ● 97'-0"
5. * INDICATES DIMENSIONS TO BE COORDINATED WITH OTHER DISCIPLINES. COORDINATE WITH CIVIL, MECHANICAL, ELECTRICAL, AND ARCHITECTURAL DRAWINGS AND EQUIPMENT SUPPLIED FOR OPENING SIZES AND LOCATIONS AND SUPPORT LOCATIONS.

HENNEPIN COUNTY MEDICAL EXAMINER FACILITY
MINNETONKA, MN

HENNEPIN COUNTY
A 2208 GOVERNMENT CENTER,
MINNEAPOLIS, MN 55415

LEO A DALY
730 SECOND AVE SOUTH, SUITE 1300,
MINNEAPOLIS, MN 55402-2455
T: 612.338.8741

LABORATORY EQUIPMENT DESIGN
MCCLAREN, WILSON, & LAWRIE
11798 N LAKERIDGE PKWY, ASHLAND, VA 23005 T:804-228-7473

CIVIL ENGINEERING
ELAN DESIGN LAB
901 NORTH THIRD STREET, SUITE 120,
MINNEAPOLIS, MN 55401 T:612-260-7980

LANDSCAPE ARCHITECTURE
DAMON FARBER
401 SECOND AVE NORTH, SUITE 410,
MINNEAPOLIS, MN 55401 T:612-332-7522

TELECOMUNICATIONS ENGINEERING
TRUE NORTH CONSULTING
140 THIRD STREET SOUTH, STILLWATER,
MN 55082 T:651-705-1231

KEY PLAN

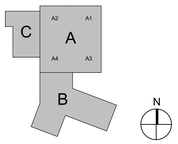

REVISIONS

NO.	DESCRIPTION	DATE

FILE LOG

ACTIVITY	BY
Manager	T POWERS
Design	S ANDERSEN
Draw	AJL RJB
Check	A SMITH

STAMP

NOT FOR CONSTRUCTION

HCME 95% CONSTRUCTION DOCUMENTS

LAD Project No. 023-10155-025
Hennepin County Contract No. 4984A9
Hennepin County Project No. 1002306
07/26/2019

OVERALL FLOOR PLANS, LEVELS 1 & 2

AE100

Copyright © 2018 LEO A DALY Company

7/29/2019 2:58:35 PM \\ladcrshares\projects\023\023-10155-025\4-0-Production-Working\4-1-BIM-CAD\Revit\ HCME-Arch-Struct_LAD.rvt

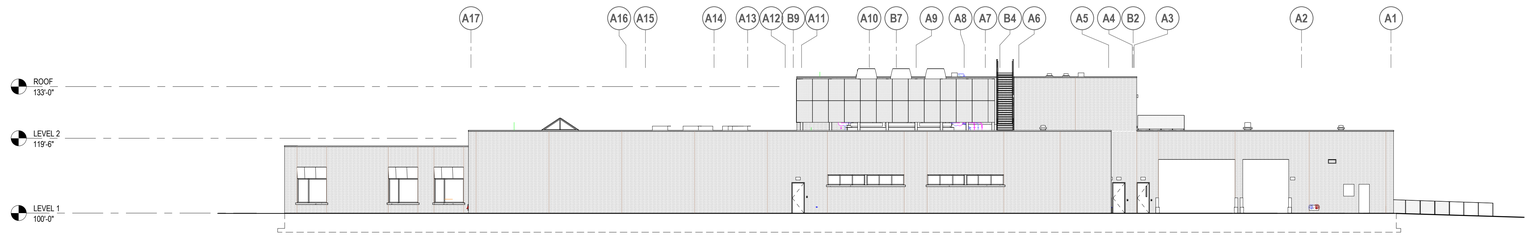

E1 EXTERIOR ELEVATION - NORTH

SCALE: 1/16" = 1'-0"

OVERALL ELEVATIONS SHOWN FOR REFERENCE, SEE PARTIAL ELEVATIONS FOR FURTHER INFORMATION.

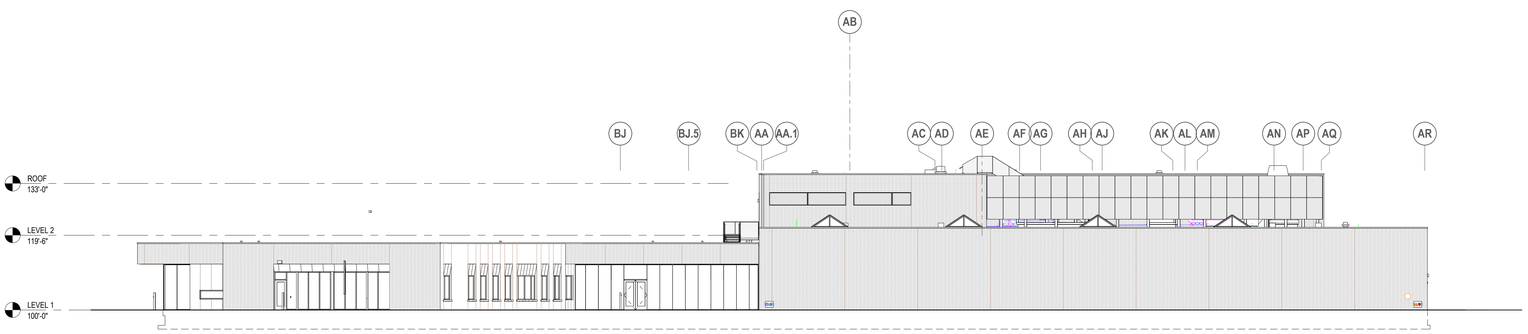

D1 EXTERIOR ELEVATION - EAST

SCALE: 1/16" = 1'-0"

OVERALL ELEVATIONS SHOWN FOR REFERENCE, SEE PARTIAL ELEVATIONS FOR FURTHER INFORMATION.

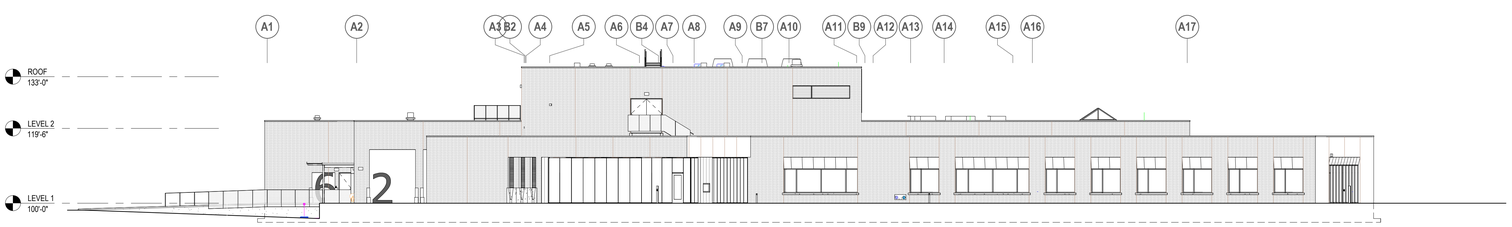

B1 EXTERIOR ELEVATION - SOUTH

SCALE: 1/16" = 1'-0"

OVERALL ELEVATIONS SHOWN FOR REFERENCE, SEE PARTIAL ELEVATIONS FOR FURTHER INFORMATION.

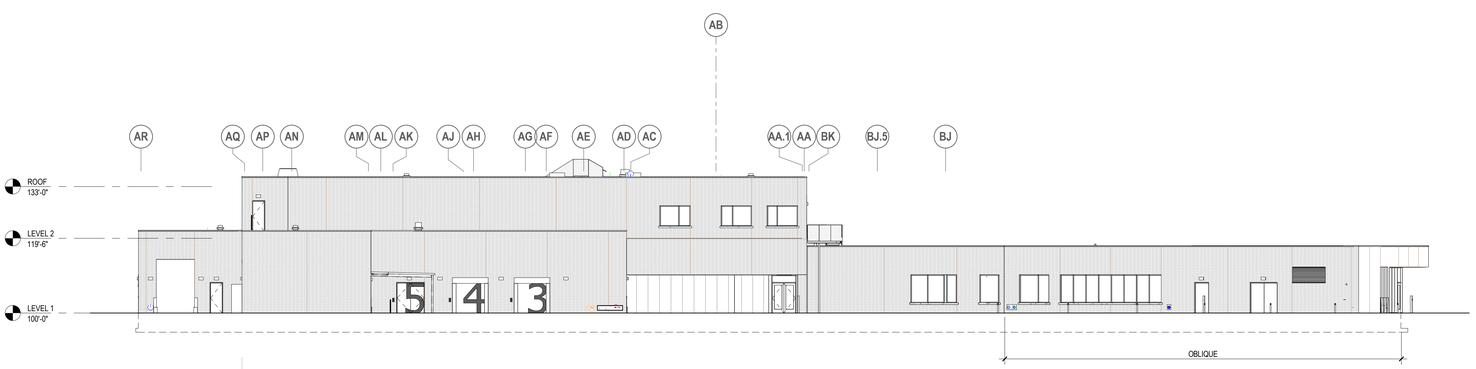

A1 EXTERIOR ELEVATION - WEST

SCALE: 1/16" = 1'-0"

OVERALL ELEVATIONS SHOWN FOR REFERENCE, SEE PARTIAL ELEVATIONS FOR FURTHER INFORMATION.

EXTERIOR MATERIAL LEGEND

- **(AAPB)** ADA ACTUATOR PUSH BUTTON
- **(BDBM)** BOND BEAM, SEE STRUCTURAL
- **(BRICK-1)** ENDICOTT NORMAN BRICK 1/3 RUNNING BOND
- **(CDM)** CAVITY DRAINAGE MATERIAL
- **(CFMF)** G90 COLD FORMED METAL FRAMING. 16 GA 16"O.C. MAX BY 054000
- **(CFMF-1)** DIAGONAL BRACING AS REQ'D BY 054000
- **(CFMF-2)** Z FURRING, PROFILE /SIZE AS DETAILED
- **(CFMF-3)** DEFLECTION TRACK
- **(CGRM)** 8" COMPACTED GRAVEL OR CRUSHED STONE MEETING THE REQUIREMENTS FOR RADON MITIGATION
- **(CJV)** CONTROL JOINT - V
- **(CMU)** CONCRETE MASONRY UNIT, SEE STRUCTURAL FOR MASONRY REQUIREMENTS
- **(CR)** CARD READER, SEE ELECTRICAL.
- **(CW-1)** THERMALLY BROKEN CURTAINWALL FINISH SYSTEM. PREFINISHED - SSG
- **(CW-2)** THERMALLY BROKEN CURTAINWALL FINISH SYSTEM. PREFINISHED
- **(CWFP)** CURTAIN WALL FILLER PANEL BY CURTAIN WALL PROVIDER , MATCH COLOR TO FRAME
- **(CWHR)** CURTAIN WALL HEAD RECEPTOR
- **(CWT-1/3)** CERAMIC TILE. SEE FINISH PLANS
- **(DNS)** DOOR NUMBER SIGN - PAINT
- **(EJC-1)** 2" EXPANSION JOINT, ROOF: FRAMED BELLOWS COVER SYSTEM WITH MOISTURE BARRIER. (MM SYSTEMS ERJ SERIES OR APPROVED EQUAL)
- **(EJC-2)** EXPANSION JOINT COVER - COPPER
- **(EJC-3)** EXPANSION JOINT COVER - BRONZE
- **(EJC-4)** 2" EXTERIOR EXPANSION JOINT WALL COVER, MATCH TO BRICK COLOR
- **(EJC-5)** 2" PREFINISHED INTERIOR EXPANSION JOINT WALL COVER
- **(EPC)** EPOXY PAINT COATING
- **(EPDM-1)** FULLY ADHERED EPDM ROOFING. 60 MIL MEMBRANE, 1/2" COVER BOARD, 5"MIN POLYISO INSULATION AND VAPOR BARRIER. (FIRESTONE RUBBERGARD EPDM PLATINUM SYSTEM OR APPROVED EQUAL)

- **(FAEB)** FIRE ALARM EXTERIOR BELL, SEE ELEC.
- **(FB)** FIRE BARRIER
- **(FGS-1)** MASONRY FOAM GASKET SEAL
- **(GBD-1)** INTERIOR GYPSUM BOARD - 5/8" TYPE X
- **(GSH-1)** EXTERIOR GYPSUM BOARD SHEATHING - 5/8" TYPE X

- **(HMDF)** HOLLOW METAL DOOR AND FRAME (PNT-8)
- **(INS-1)** POLYISOCYANURATE RIGID BOARD INSULATION
- **(INS-2)** EXTRUDED POLYSTYRENE: RIGID BOARD INSULATION, BELOW GRADE
- **(INS-3)** MINERAL WOOL BATT INSULATION
- **(INS-4)** SPRAY FOAM INSULATION, SPRAY-APPLIED THERMAL BARRIER - INTUMESCENT FIREPROOFING MATERIAL
- **(INS-5)** SPRAY FOAM INSULATION, SPRAY-APPLIED THERMAL BARRIER IN EXTERIOR STUD WALL
- **(LDB)** LOADING DOCK BUMPER
- **(LDL)** LOADING DOCK LIGHT
- **(LDS)** LOADING DOCK SEAL
- **(LMSF)** LIGHT GAUGE METAL STUD FRAMING. 16 GA MAX O.C., G60
- **(LT-1)** GALVANIZED STEEL LINTEL, SEE STRUC. - COLOR TO MATCH BRICK (PNT-8)
- **(LTFX)** LIGHTING FIXTURE, SEE ELEC.
- **(LVR-1)** 4" DRAINABLE ALUMINUM LOUVER WITH SCREEN AND MOUNTING ACCESSORIES BLANK OFF AS APPLICABLE
- **(MCJ-1)** MASONRY CONTROL JOINT
- **(MEMB)** METAL EQUIPMENT MOUNTING BOLLARD
- **(MEQ)** MECHANICAL EQUIPMENT, SEE MECH
- **(MF-1)** METAL FABRICATION - MECHANICAL SCREEN
- **(MF-2)** GALVANIZED GRATING ROOF ACCESS STAIR BY 055113
- **(MF-2A)** METAL FABRICATION - ROOF ACCESS STAIR - PAINT TO MATCH BRICK (PNT-8) BY 055113
- **(MTCP)** 3/8" GALV. STEEL CANOPY (PNT-8)
- **(MTL-1)** COMPOSITE COPPER PANEL WITH CONCEALED FASTENING. INCLUDE FURRING, SUPPORTING ELEMENTS AND TRIM.
- **(MTL-2)** COMPOSITE METAL PANEL WITH CONCEALED FASTENING. INCLUDE FURRING, SUPPORTING ELEMENTS AND TRIM.
- **(MWV-1)** CELLULAR MASONRY WEEP/VENT (TOP & BOT)
- **(OCD-1)** OVERHEAD INSULATED COILING DOOR. MOTORIZED WITH CONTINUOUS HEAVY DUTY WEATHER SEAL
- **(OCDG)** OVERHEAD INSULATED COILING DOOR POLYCARBONATE LITES
- **(ODN)** OVERFLOW DOWNSPOUT NOZZLE, SEE MECH
- **(PCS-1)** PRECAST WINDOW SILL, MATCH TO BRICK COLOR.
- **(PORD)** PRIMARY AND OVERFLOW ROOF DRAIN
- **(RL-1)** EXTERIOR RAILING -1 1/2" X 1 1/2" GALVANIZED STEEL BALUSTER W/ PERFORATED METAL PANEL RAILING (PNT-8) BY 055113
- **(RSD-1)** 1/2" ROOF SUBSTRATE BOARD
- **(SAB-1)** SPRAY APPLIED AIR BARRIER
- **(SKLT)** SKYLIGHT SYSTEM
- **(SLNT)** SEALANT W/ BACKER ROD
- **(SLNT-1)** SEALANT
- **(SMF-1)** PREFINISHED FORMED METAL FLASHING, COLOR TO MATCH BRICK (PNT-8)
- **(SMF-2)** PREFINISHED METAL DRIP EDGE W/ FLEXIBLE MEMBRANE FLASHING, COLOR TO MATCH BRICK (PNT-8)
- **(SMF-3)** FLEXIBLE MEMBRANE SILL FLASHING
- **(SMF-4)** PREFINISHED METAL FLASHING, COLOR TO MATCH WINDOW FRAME
- **(SMF-5)** COPPER DRIP EDGE W/ FLEXIBLE MEMBRANE FLASHING
- **(SMF-6)** PREFINISHED METAL COUNTER FLASHING, COLOR TO MATCH BRICK
- **(SSM-4)** SOLID SURFACE WINDOW SILL
- **(STR)** STRUCTURAL, SEE STRUCTURAL DRAWINGS
- **(TB-1)** MECHANICALLY FASTENED TERMINATION BAR W/ CONT. SEALANT ON TOP
- **(UVB-1)** UNDERSLAB SHEET VAPOR BARRIER, 10 MIL MIN, CLASS A
- **(WBK-1)** WOOD BLOCKING - FIRE TREATED
- **(WDS)** SHIM AS REQUIRED
- **(WG-1)** WHEEL GUARD WALL PROTECTION
- **(WH)** WALL HYDRANT, SEE MECH
- **(WPS-1)** WATER PROOFING SYSTEM - DRAINAGE MAT
- **(WPS-2)** SELF-ADHERING MODIFIED BITUMINOUS SHEET MEMBRANE - 40 MIL
- **(WS-1)** WINDOW SHADE
- **(WSH-1)** 3/4" PLYWOOD SHEATHING - FIRE TREATED

GENERAL ELEVATION NOTES

1. EXTERIOR SNT COLOR TO MATCH BRICK. CUSTOM COLOR AS REQD.
2. PAINT STL LINTELS TO MATCH BRICK. SEE SPEC.
3. BRICK WALL ELEVATIONS SHOW INTENT ONLY. BRICK SUPPLIER TO COORDINATE ALL SIZES, CONFIGURATIONS, OPENINGS AND CONTROL JOINTS.
4. PAINT VISIBLE INTERIOR SURFACES OF EXTERIOR LOUVERS BLACK.
5. ALL MECHANICAL ITEMS ON WALL SURFACE SHOW INTENT ONLY. MECH CONTRACTOR COORDINATE W/ ARCHITECT PRIOR TO INSTALL. SEE MECH DRAWINGS FOR ADDITONAL INFO.
6. ALL ELECTRICAL ITEMS ON WALL SURFACE SHOW INTENT ONLY. ELEC. CONTRACTOR COORDINATE W/ ARCHITECT PRIOR TO INSTALL. SEE ELEC DRAWINGS FOR ADDITONAL INFO.
7. EXTERIOR LOUVERS TO BE PAINTED CUSTOM COLOR TO MATCH BRICK.

HENNEPIN COUNTY MEDICAL EXAMINER FACILITY
MINNETONKA, MN

HENNEPIN COUNTY
A 2208 GOVERNMENT CENTER,
MINNEAPOLIS, MN 55415

LEO A DALY
730 SECOND AVE SOUTH, SUITE 1300,
MINNEAPOLIS, MN 55402-2455
T: 612.338.8741

LABORATORY EQUIPMENT DESIGN
MCCLAREN, WILSON, & LAWRIE
11798 N LAKERIDGE PKWY, ASHLAND, VA 23005 T:804-228-7473

CIVIL ENGINEERING
ELAN DESIGN LAB
901 NORTH THIRD STREET, SUITE 120,
MINNEAPOLIS, MN 55401 T:612-260-7980

LANDSCAPE ARCHITECTURE
DAMON FARBER
401 SECOND AVE NORTH, SUITE 410,
MINNEAPOLIS, MN 55401 T:612-332-7522

TELECOMUNICATIONS ENGINEERING
TRUE NORTH CONSULTING
140 THIRD STREET SOUTH, STILLWATER,
MN 55082 T:651-705-1231

KEY PLAN

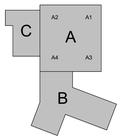

REVISIONS

NO.	DESCRIPTION	DATE

FILE LOG

ACTIVITY	BY
Manager	T POWERS
Design	S ANDERSEN
Draw	RJB, AJI
Check	A SMITH

STAMP

NOT FOR CONSTRUCTION

HCME 95% CONSTRUCTION DOCUMENTS

LAD Project No. 023-10155-025
Hennepin County Contract No. 4984A9
Hennepin County Project No. 1002306
07/26/2019

OVERALL EXTERIOR ELEVATIONS

AE200

Copyright © 2018 LEO A DALY Company

7/29/2019 3:00:33 PM \\adcrshares\projects\023\023-10155-025\4-0-Production-Working\4-1-BIM-CAD\Revit\ HCME-Arch-Struct_LAD.rvt

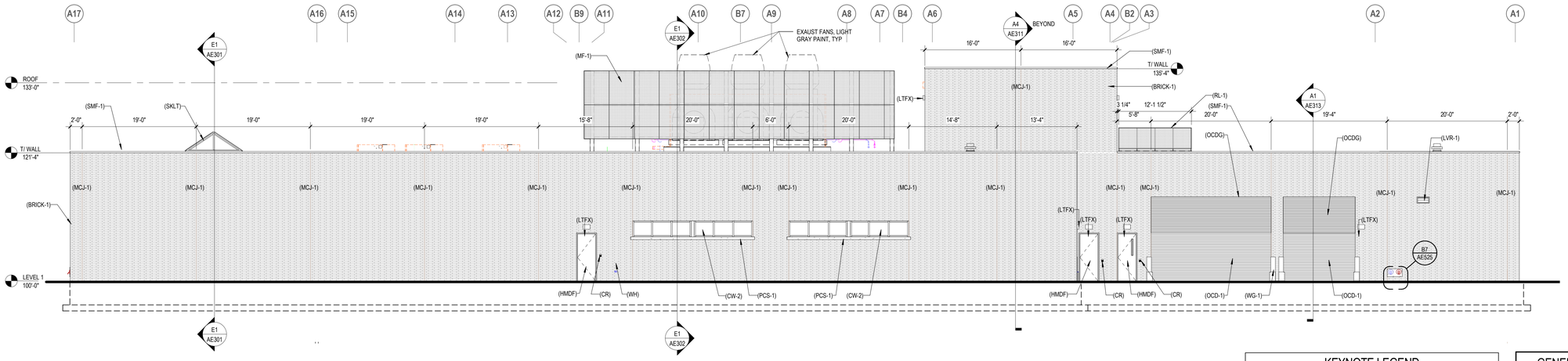

E1 PARTIAL EXTERIOR ELEVATION - (AREA A & C) NORTH

SCALE: 1/8" = 1'-0"

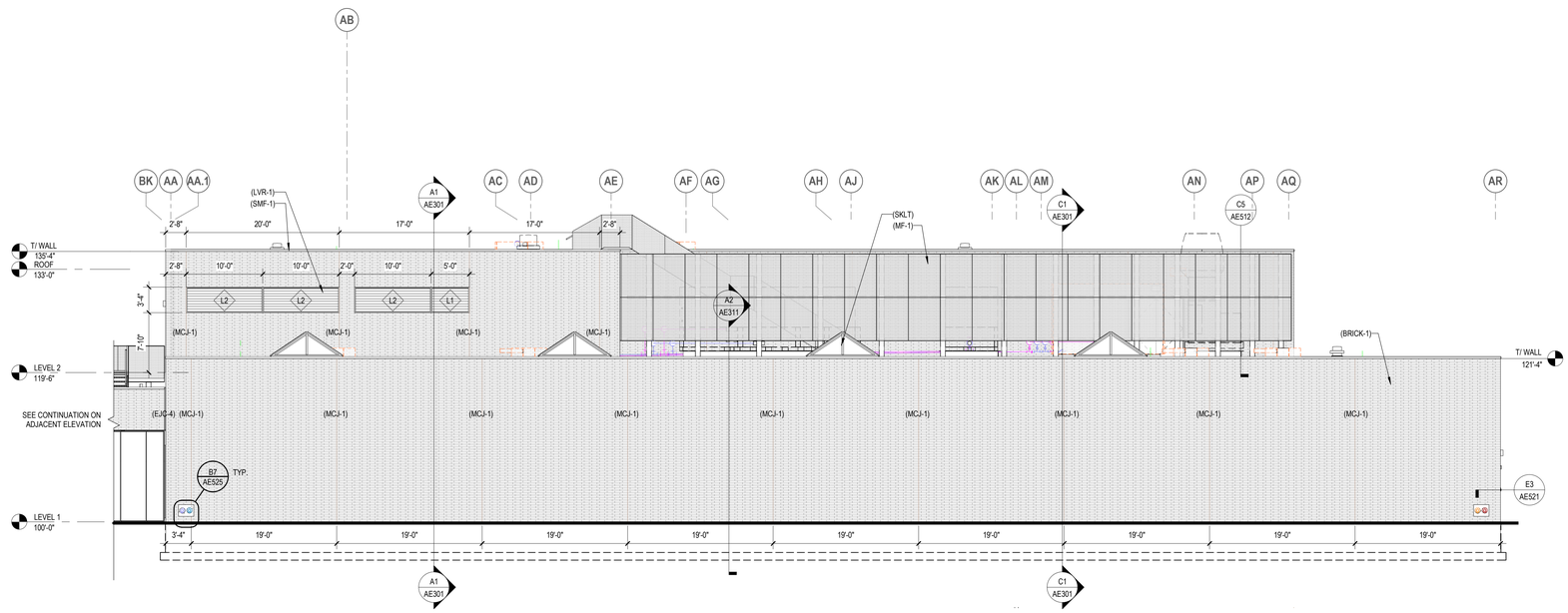

C1 PARTIAL EXTERIOR ELEVATION - (AREA A) EAST

SCALE: 1/8" = 1'-0"

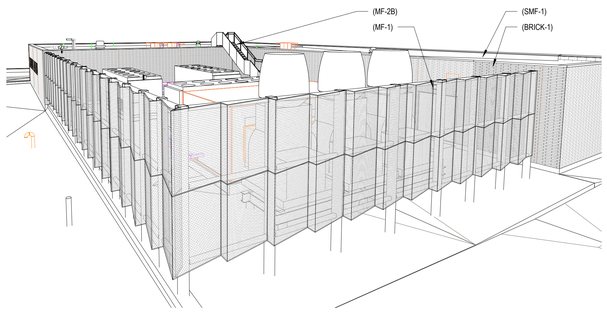

C6 ROOF SCREEN WALL VIEW - REFERENCE ONLY

SCALE:

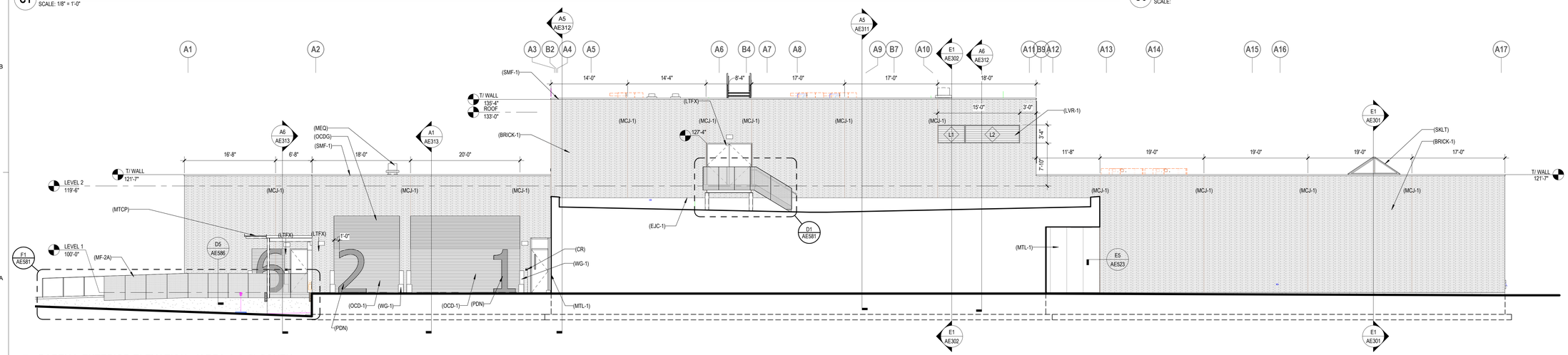

A1 PARTIAL EXTERIOR ELEVATION - (AREA A & C) SOUTH

SCALE: 1/8" = 1'-0"

KEYNOTE LEGEND

Key Value	Keynote Text
(BRICK-1)	FACE BRICK (3 5/8" X 2 1/4" X 11 5/8")
(CR)	CARD READER, SEE ELECTRICAL.
(CW-2)	THERMALLY BROKEN CURTAINWALL FINISH SYSTEM - PREFINISHED
(EJC-1)	2" EXPANSION JOINT, ROOF: FRAMED BELLOWS COVER SYSTEM WITH MOISTURE BARRIER. (MM SYSTEMS ERJ SERIES OR APPROVED EQUAL)
(EJC-4)	2" EXTERIOR EXPANSION JOINT WALL COVER, MATCH TO BRICK COLOR
(HMDF)	HOLLOW METAL DOOR AND FRAME (PNT-8)
(LTFX)	LIGHTING FIXTURE, SEE ELEC.
(LVR-1)	4" DRAINABLE ALUMINUM LOUVER WITH SCREEN AND MOUNTING ACCESSORIES BLANK OFF AS APPLICABLE
(MCJ-1)	MASONRY CONTROL JOINT
(MEQ)	MECHANICAL EQUIPMENT, SEE MECH
(MF-1)	METAL FABRICATION - MECHANICAL SCREEN (PNT-8)
(MF-2A)	METAL FABRICATION - ROOF ACCESS STAIR - PAINT TO MATCH BRICK (PNT-8) BY 055113
(MTCP)	3/8" GALV. STEEL PLATE CANOPY, WATER PROOF WELD AT JOINTS - PAINT TO MATCH BRICK (PNT-8)
(MTL-1)	COMPOSITE COPPER PANEL WITH CONCEALED FASTENING. INCLUDE FURRING, SUPPORTING ELEMENTS AND TRIM.
(OCD-1)	OVERHEAD INSULATED COILING DOOR. MOTORIZED WITH CONTINUOUS HEAVY DUTY WEATHER SEAL
(OCDG)	OVERHEAD INSULATED COILING DOOR POLYCARBONATE LITES
(PCS-1)	PRECAST WINDOW SILL, (ANCHORAGE REQUIRED- NOT SHOWN) MATCH TO BRICK COLOR.
(PDN)	5'W X 8'H PAINTED DOOR NUMBER, PALM SPRINGS FONT, COORDINATE W/ DOOR MFR. FOR PAINTING.
(RL-1)	EXTERIOR RAILING -1 1/2" X 1 1/2" GALVANIZED STEEL BALUSTER W/ PERFORATED METAL PANEL RAILING (PNT-8) BY 055113
(SKLT)	SKYLIGHT SYSTEM
(SMF-1)	PREFINISHED FORMED METAL FLASHING, COLOR TO MATCH BRICK (PNT-8)
(WG-1)	WHEEL GUARD WALL PROTECTION
(WH)	WALL HYDRANT, SEE MECH

GENERAL ELEVATION NOTES

1. EXTERIOR SNT COLOR TO MATCH BRICK. CUSTOM COLOR AS REQD
2. PAINT STL LINTELS TO MATCH BRICK. SEE SPEC.
3. BRICK WALL ELEVATIONS SHOW INTENT ONLY. BRICK SUPPLIER TO COORDINATE ALL SIZES, CONFIGURATIONS, OPENINGS AND CONTROL JOINTS.
4. PAINT VISIBLE INTERIOR SURFACES OF EXTERIOR LOUVERS BLACK.
5. ALL MECHANICAL ITEMS ON WALL SURFACE SHOW INTENT ONLY. MECH CONTRACTOR COORDINATE W/ ARCHITECT PRIOR TO INSTALL. SEE MECH DRAWINGS FOR ADDITONAL INFO.
6. ALL ELECTRICAL ITEMS ON WALL SURFACE SHOW INTENT ONLY. ELEC. CONTRACTOR COORDINATE W/ ARCHITECT PRIOR TO INSTALL. SEE ELEC DRAWINGS FOR ADDITONAL INFO.
7. EXTERIOR LOUVERS TO BE PAINTED CUSTOM COLOR TO MATCH BRICK.

HENNEPIN COUNTY MEDICAL EXAMINER FACILITY
MINNETONKA, MN

HENNEPIN COUNTY
A 2208 GOVERNMENT CENTER,
MINNEAPOLIS, MN 55415

LEO A DALY
730 SECOND AVE SOUTH, SUITE 1300,
MINNEAPOLIS, MN 55402-2455
T: 612.338.8741

LABORATORY EQUIPMENT DESIGN
MCCLAREN, WILSON, & LAWRIE
11798 N LAKERIDGE PKWY, ASHLAND, VA 23005 T:804-228-7473

CIVIL ENGINEERING
ELAN DESIGN LAB
901 NORTH THIRD STREET, SUITE 120,
MINNEAPOLIS, MN 55401 T:612-260-7980

LANDSCAPE ARCHITECTURE
DAMON FARBER
401 SECOND AVE NORTH, SUITE 410,
MINNEAPOLIS, MN 55401 T:612-332-7522

TELECOMUNICATIONS ENGINEERING
TRUE NORTH CONSULTING
140 THIRD STREET SOUTH, STILLWATER,
MN 55082 T:651-705-1231

KEY PLAN

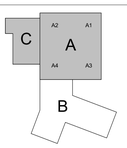

REVISIONS

NO.	DESCRIPTION	DATE

FILE LOG

ACTIVITY	BY
Manager	T POWERS
Design	S ANDERSEN
Draw	YSK, AJI, RJB
Check	A SMITH

STAMP

NOT FOR CONSTRUCTION

HCME 95% CONSTRUCTION DOCUMENTS

LAD Project No. 023-10155-025
Hennepin County Contract No. 4984A9
Hennepin County Project No. 1002306
07/26/2019

EXTERIOR ELEVATIONS

AE201

Copyright © 2018 LEO A DALY Company

7/29/2019 3:01:07 PM \\ladcsshares\projects\023\023-10155-025\4-0-Production-Working\4-1-BIM-CAD\Revit\ HCME-Arch-Struct_LAD.rvt

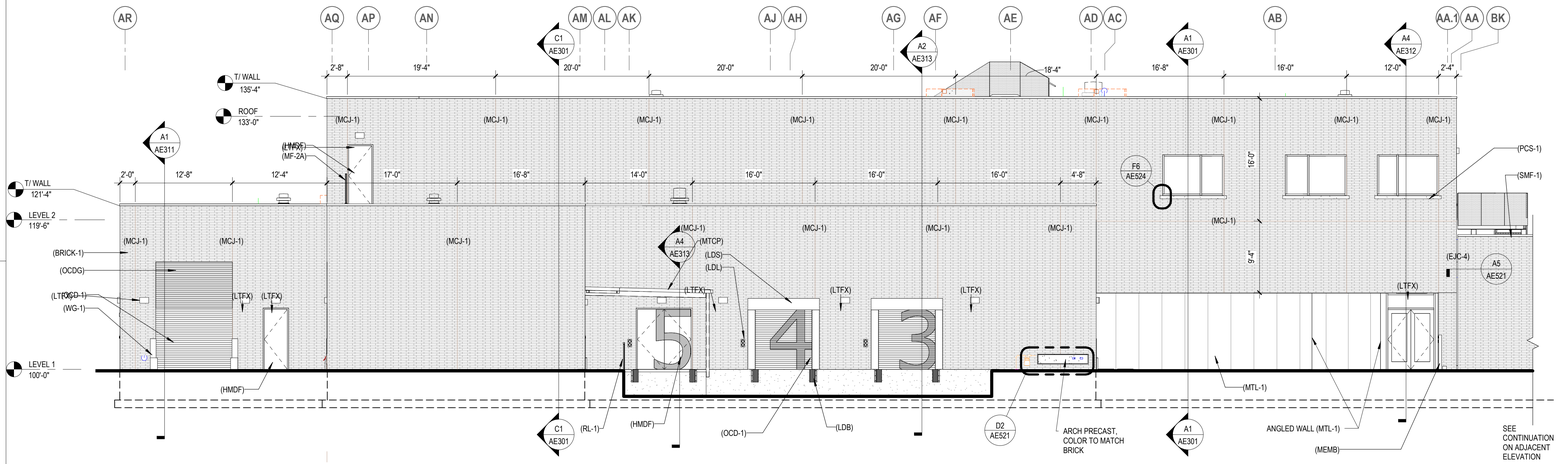

E1 PARTIAL EXTERIOR ELEVATION - (AREA A & C) WEST
SCALE: 1/8" = 1'-0"

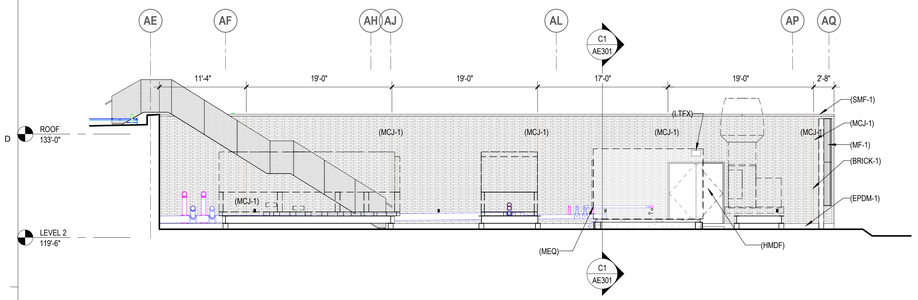

D1 EXTERIOR ELEVATION - (AREA A) ROOFTOP MECH. WEST
SCALE: 1/8" = 1'-0"

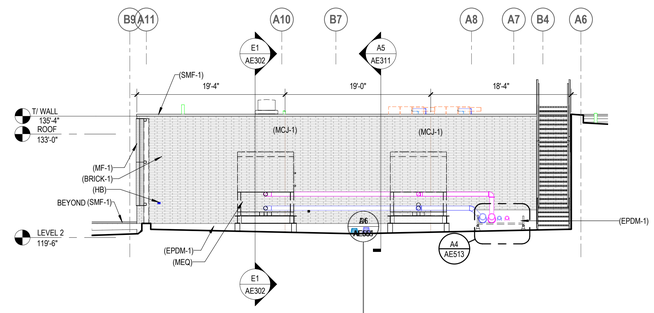

D4 EXTERIOR ELEVATION - (AREA A) ROOFTOP MECH. SOUTH
SCALE: 1/8" = 1'-0"

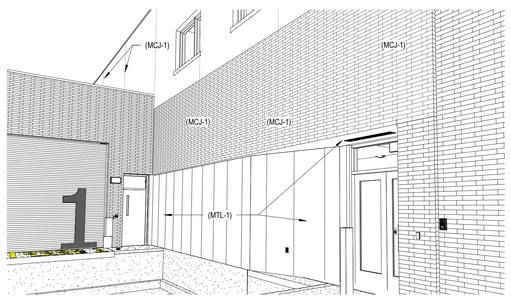

B1 STAFF ENTERANCE VIEW - REFERENCE ONLY
SCALE:

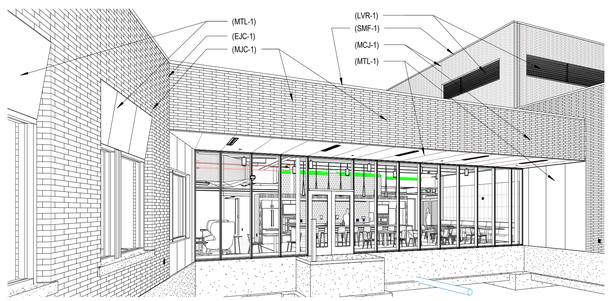

B3 BREAK ROOM VIEW - REFERENCE ONLY
SCALE:

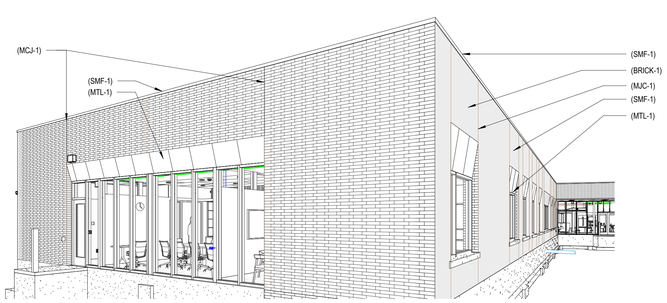

B5 OFFICE/ LIBRARY VIEW - REFERENCE ONLY
SCALE:

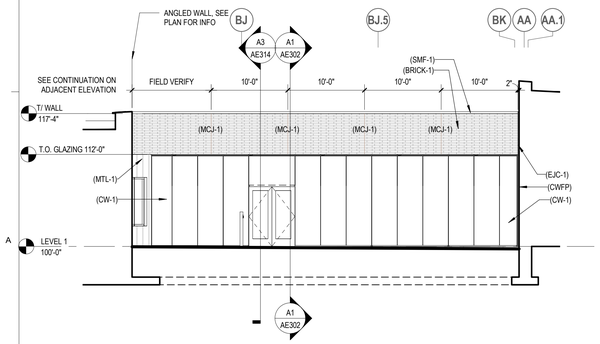

A1 PARTIAL EXTERIOR ELEVATION - (AREA B) EAST - BREAK ROOM
SCALE: 1/8" = 1'-0"

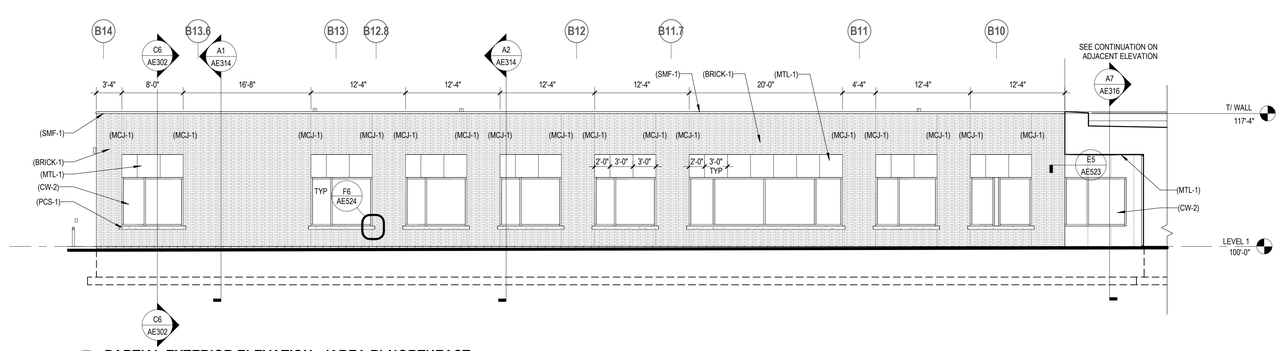

A4 PARTIAL EXTERIOR ELEVATION - (AREA B) NORTHEAST
SCALE: 1/8" = 1'-0"

GENERAL ELEVATION NOTES

1. EXTERIOR SNT COLOR TO MATCH BRICK. CUSTOM COLOR AS REQD.
2. PAINT STL LINTELS TO MATCH BRICK. SEE SPEC.
3. BRICK WALL ELEVATIONS SHOW INTENT ONLY. BRICK SUPPLIER TO COORDINATE ALL SIZES, CONFIGURATIONS, OPENINGS AND CONTROL JOINTS.
4. PAINT VISIBLE INTERIOR SURFACES OF EXTERIOR LOUVERS BLACK.
5. ALL MECHANICAL ITEMS ON WALL SURFACE SHOW INTENT ONLY, MECH CONTRACTOR COORDINATE W/ ARCHITECT PRIOR TO INSTALL. SEE MECH DRAWINGS FOR ADDITIONAL INFO.
6. ALL ELECTRICAL ITEMS ON WALL SURFACE SHOW INTENT ONLY, ELEC. CONTRACTOR COORDINATE W/ ARCHITECT PRIOR TO INSTALL. SEE ELEC DRAWINGS FOR ADDITIONAL INFO.
7. EXTERIOR LOUVERS TO BE PAINTED CUSTOM COLOR TO MATCH BRICK.

KEYNOTE LEGEND

Key Value	Keynote Text
(BRICK-1)	FACE BRICK (3 5/8" X 2 1/4" X 11 5/8")
(CW-1)	THERMALLY BROKEN SSG CURTAINWALL FINISH SYSTEM - PREFINISHED
(CW-2)	THERMALLY BROKEN CURTAINWALL FINISH SYSTEM - PREFINISHED
(CWFP)	CURTAIN WALL FILLER PANEL BY CURTAIN WALL PROVIDER , MATCH COLOR TO FRAME
(EJC-1)	2" EXPANSION JOINT, ROOF. FRAMED BELLOWS COVER SYSTEM WITH MOISTURE BARRIER. (MM SYSTEMS ERJ SERIES OR APPROVED EQUAL)
(EJC-4)	2" EXTERIOR EXPANSION JOINT WALL COVER, MATCH TO BRICK COLOR
(EPDM-1)	FULLY ADHERED EPDM ROOFING. 60 MIL MEMBRANE, 1/2" COVER BOARD, 5"MIN POLYISO INSULATION AND VAPOR BARRIER. (FIRESTONE RUBBERGARD EPDM PLATINUM SYSTEM OR APPROVED EQUAL)
(HB)	HOSE BIB, SEE PLUMBING
(HMDF)	HOLLOW METAL DOOR AND FRAME (PNT-8)
(LDB)	LOADING DOCK BUMPER
(LDL)	LOADING DOCK LIGHT
(LDS)	LOADING DOCK SEAL
(LTFX)	LIGHTING FIXTURE, SEE ELEC.
(MCJ-1)	MASONRY CONTROL JOINT
(MEMB)	METAL EQUIPMENT MOUNTING BOLLARD
(MEQ)	MECHANICAL EQUIPMENT, SEE MECH
(MF-1)	METAL FABRICATION - MECHANICAL SCREEN (PNT-8)
(MF-2A)	METAL FABRICATION - ROOF ACCESS STAIR - PAINT TO MATCH BRICK (PNT-8) BY 055113
(MTCP)	3/8" GALV. STEEL PLATE CANOPY, WATER PROOF WELD AT JOINTS - PAINT TO MATCH BRICK (PNT-8)
(MTL-1)	COMPOSITE COPPER PANEL WITH CONCEALED FASTENING. INCLUDE FURRING, SUPPORTING ELEMENTS AND TRIM.
(OCD-1)	OVERHEAD INSULATED COILING DOOR. MOTORIZED WITH CONTINUOUS HEAVY DUTY WEATHER SEAL
(OCDG)	OVERHEAD INSULATED COILING DOOR POLYCARBONATE LITES
(PCS-1)	PRECAST WINDOW SILL, (ANCHORAGE REQUIRED- NOT SHOWN) MATCH TO BRICK COLOR.
(RL-1)	EXTERIOR RAILING -1 1/2" X 1 1/2" GALVANIZED STEEL BALUSTER W/ PERFORATED METAL PANEL RAILING (PNT-8) BY 055113
(SMF-1)	PREFINISHED FORMED METAL FLASHING, COLOR TO MATCH BRICK (PNT-8)
(WG-1)	WHEEL GUARD WALL PROTECTION

HENNEPIN COUNTY MEDICAL EXAMINER FACILITY
MINNETONKA, MN

HENNEPIN COUNTY
A 2208 GOVERNMENT CENTER,
MINNEAPOLIS, MN 55415

LEO A DALY
730 SECOND AVE SOUTH, SUITE 1300,
MINNEAPOLIS, MN 55402-2455
T: 612.338.8741

LABORATORY EQUIPMENT DESIGN
MCCLAREN, WILSON, & LAWRIE
11798 N LAKERIDGE PKWY, ASHLAND, VA 23005 T:804-228-7473

CIVIL ENGINEERING
ELAN DESIGN LAB
901 NORTH THIRD STREET, SUITE 120,
MINNEAPOLIS, MN 55401 T:612-260-7980

LANDSCAPE ARCHITECTURE
DAMON FARBER
401 SECOND AVE NORTH, SUITE 410,
MINNEAPOLIS, MN 55401 T:612-332-7522

TELECOMUNICATIONS ENGINEERING
TRUE NORTH CONSULTING
140 THIRD STREET SOUTH, STILLWATER,
MN 55082 T:651-705-1231

KEY PLAN

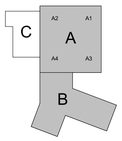

REVISIONS

NO.	DESCRIPTION	DATE

FILE LOG

ACTIVITY	BY
Manager	T POWERS
Design	S ANDERSEN
Draw	YSK, AJI, RJB
Check	A SMITH

STAMP

NOT FOR CONSTRUCTION

HCME 95% CONSTRUCTION DOCUMENTS

LAD Project No. 023-10155-025
Hennepin County Contract No. 4984A9
Hennepin County Project No. 1002306
07/26/2019

EXTERIOR ELEVATIONS

AE202

Copyright © 2018 LEO A DALY Company

7/29/2019 3:02:16 PM \\ladcs\shares\projects\023\023-10155-025\4-0-Production-Working\4-1-BIM-CAD\Revit\ HCME-Arch-Struct_LAD.rvt

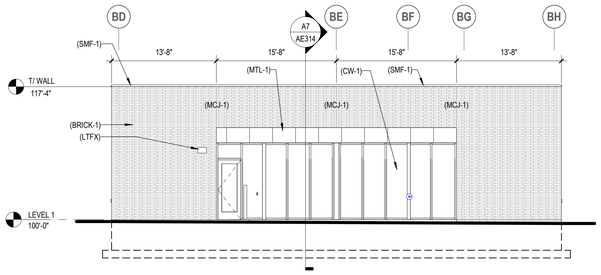

F1 PARTIAL EXTERIOR ELEVATION - (AREA B) SOUTHEAST - LIBRARY

SCALE: 1/8" = 1'-0"

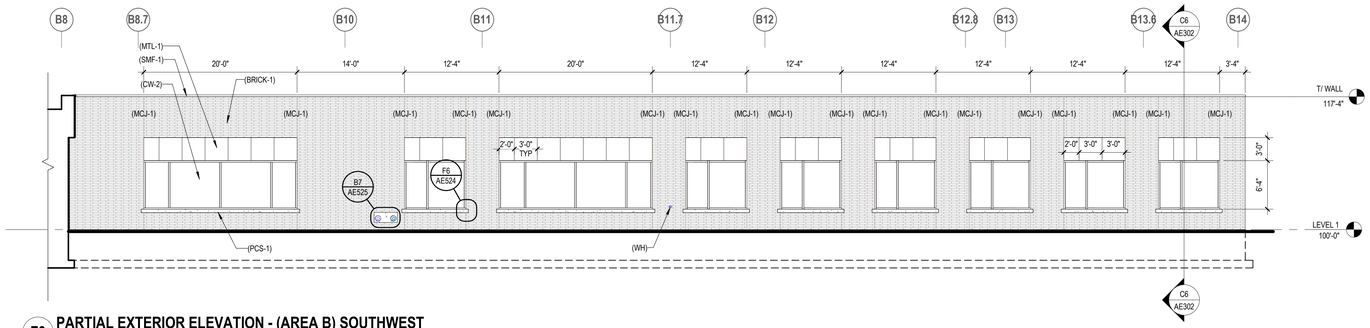

F3 PARTIAL EXTERIOR ELEVATION - (AREA B) SOUTHWEST

SCALE: 1/8" = 1'-0"

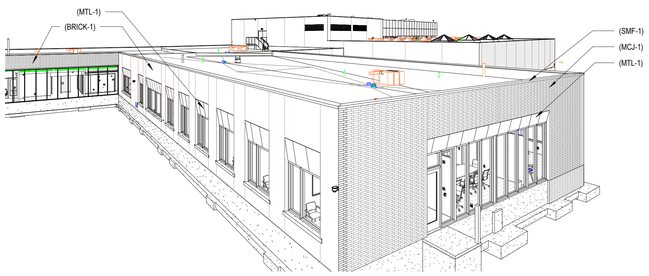

D1 SOUTHEAST CORNER VIEW - REFERENCE ONLY

SCALE:

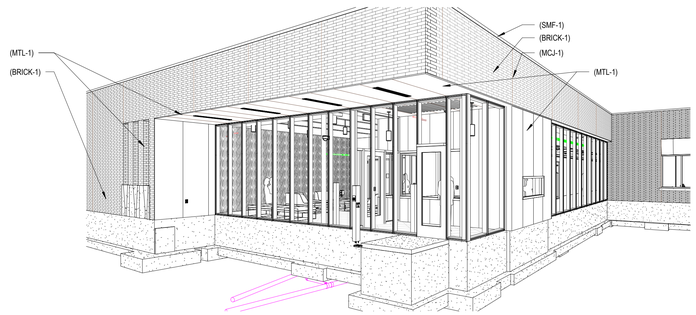

D3 PUBLIC ENTRANCE VIEW - REFERENCE ONLY

SCALE:

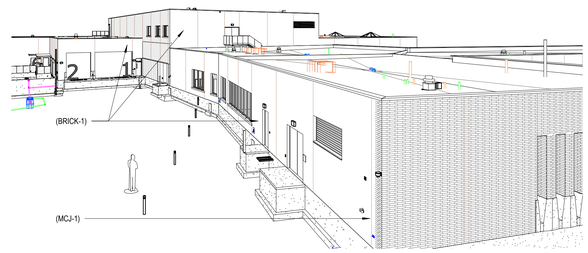

D6 SOUTHWEST CORNER VIEW - REFERENCE ONLY

SCALE:

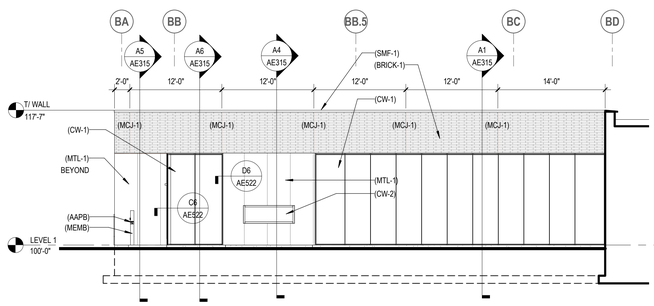

C1 PARTIAL EXTERIOR ELEVATION - (AREA B) SOUTHEAST

SCALE: 1/8" = 1'-0"

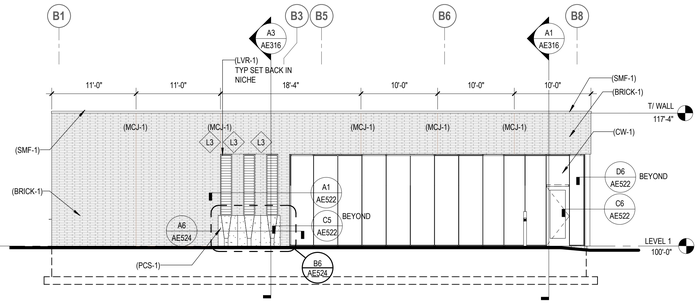

C4 PARTIAL EXTERIOR ELEVATION - (AREA B) SOUTHWEST - PUBLIC ENTRANCE

SCALE: 1/8" = 1'-0"

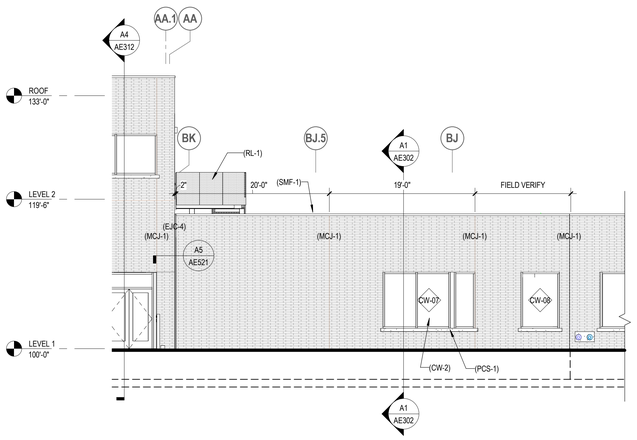

A1 PARTIAL EXTERIOR ELEVATION - (AREA B) WEST

SCALE: 1/8" = 1'-0"

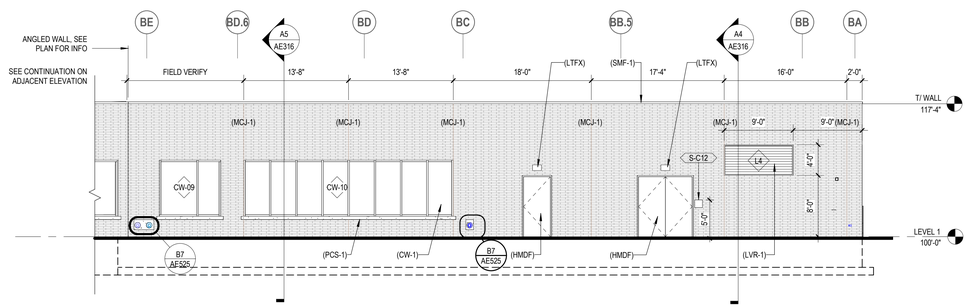

A3 PARTIAL EXTERIOR ELEVATION - (AREA B) NORTHWEST

SCALE: 1/8" = 1'-0"

GENERAL ELEVATION NOTES

1. EXTERIOR SNT COLOR TO MATCH BRICK. CUSTOM COLOR AS REQD.
2. PAINT STL LINTELS TO MATCH BRICK. SEE SPEC.
3. BRICK WALL ELEVATIONS SHOW INTENT ONLY. BRICK SUPPLIER TO COORDINATE ALL SIZES, CONFIGURATIONS, OPENINGS AND CONTROL JOINTS.
4. PAINT VISIBLE INTERIOR SURFACES OF EXTERIOR LOUVERS BLACK.
5. ALL MECHANICAL ITEMS ON WALL SURFACE SHOW INTENT ONLY. MECH CONTRACTOR COORDINATE W/ ARCHITECT PRIOR TO INSTALL. SEE MECH DRAWINGS FOR ADDITONAL INFO.
6. ALL ELECTRICAL ITEMS ON WALL SURFACE SHOW INTENT ONLY. ELEC. CONTRACTOR COORDINATE W/ ARCHITECT PRIOR TO INSTALL. SEE ELEC DRAWINGS FOR ADDITONAL INFO.
7. EXTERIOR LOUVERS TO BE PAINTED CUSTOM COLOR TO MATCH BRICK.

KEYNOTE LEGEND

Key Value	Keynote Text
(AAPB)	ADA ACTUATOR PUSH BUTTON
(BRICK-1)	FACE BRICK (3 5/8" X 2 1/4" X 11 5/8")
(CW-1)	THERMALLY BROKEN SSG CURTAINWALL FINISH SYSTEM - PREFINISHED
(CW-2)	THERMALLY BROKEN CURTAINWALL FINISH SYSTEM - PREFINISHED
(EJC-4)	2" EXTERIOR EXPANSION JOINT WALL COVER, MATCH TO BRICK COLOR
(HMDF)	HOLLOW METAL DOOR AND FRAME (PNT-8)
(LTFX)	LIGHTING FIXTURE, SEE ELEC.
(LVR-1)	4" DRAINABLE ALUMINUM LOUVER WITH SCREEN AND MOUNTING ACCESSORIES BLANK OFF AS APPLICABLE
(MCJ-1)	MASONRY CONTROL JOINT
(MEMB)	METAL EQUIPMENT MOUNTING BOLLARD
(MTL-1)	COMPOSITE COPPER PANEL WITH CONCEALED FASTENING. INCLUDE FURRING, SUPPORTING ELEMENTS AND TRIM.
(PCS-1)	PRECAST WINDOW SILL, (ANCHORAGE REQUIRED- NOT SHOWN) MATCH TO BRICK COLOR.
(RL-1)	EXTERIOR RAILING -1 1/2" X 1 1/2" GALVANIZED STEEL BALLISTER W/ PERFORATED METAL PANEL RAILING (PNT-8) BY 055113
(SMF-1)	PREFINISHED FORMED METAL FLASHING, COLOR TO MATCH BRICK (PNT-8)
(WH)	WALL HYDRANT, SEE MECH

HENNEPIN COUNTY MEDICAL EXAMINER FACILITY
MINNETONKA, MN

HENNEPIN COUNTY
A 2208 GOVERNMENT CENTER,
MINNEAPOLIS, MN 55415

LEO A DALY
730 SECOND AVE SOUTH, SUITE 1300,
MINNEAPOLIS, MN 55402-2455
T: 612.338.8741

LABORATORY EQUIPMENT DESIGN
MCCLAREN, WILSON, & LAWRIE
11798 N LAKERIDGE PKWY, ASHLAND, VA 23005 T:804-228-7473

CIVIL ENGINEERING
ELAN DESIGN LAB
901 NORTH THIRD STREET, SUITE 120,
MINNEAPOLIS, MN 55401 T:612-260-7980

LANDSCAPE ARCHITECTURE
DAMON FARBER
401 SECOND AVE NORTH, SUITE 410,
MINNEAPOLIS, MN 55401 T:612-332-7522

TELECOMUNICATIONS ENGINEERING
TRUE NORTH CONSULTING
140 THIRD STREET SOUTH, STILLWATER,
MN 55082 T:651-705-1231

KEY PLAN

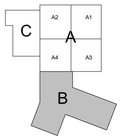

REVISIONS

NO.	DESCRIPTION	DATE

FILE LOG

ACTIVITY	BY
Manager	T POWERS
Design	S ANDERSEN
Draw	YSK, AJI, RJB
Check	A SMITH

STAMP

NOT FOR CONSTRUCTION

HCME 95% CONSTRUCTION DOCUMENTS

LAD Project No. 023-10155-025
Hennepin County Contract No. 4984A9
Hennepin County Project No. 1002306
07/26/2019

EXTERIOR ELEVATIONS

AE203

Copyright © 2018 LEO A DALY Company

7/26/2019 3:03:04 PM \\adcs\shares\projects\023\023-10155-025\4-0-Production-Working\4-1-BIM-CAD\Revit\ HCME-Arch-Struct_LAD.rvt

A1 OVERALL DEMOLITION PLAN
1" = 100'

DEMOLITION NOTES

1. BACKGROUND INFORMATION AND TOPOGRAPHIC SURVEY TAKEN FROM SURVEY PERFORMED BY HENNEPIN COUNTY RESIDENT AND REAL ESTATE SERVICES SURVEY DIVISION, MINNESOTA ON SEPTEMBER 31 2018 EXPRESSLY FOR THIS PROJECT. ELAN DESIGN LAB CANNOT GUARANTY THE ACCURACY OR COMPLETENESS OF THIS INFORMATION. VERIFY ALL FIELD CONDITIONS AND UTILITY LOCATIONS PRIOR TO EXCAVATION/CONSTRUCTION. IF ANY DISCREPANCIES OR UNKNOWN UTILITIES ARE FOUND THAT IMPACT DESIGN OR IMPAIR CONSTRUCTION, THE ENGINEER AND OWNER SHOULD BE IMMEDIATELY NOTIFIED.
2. CONTRACTOR SHALL BRING ANY CHANGED OR UNFORESEEN CONDITIONS THAT COULD RESULT IN ADDITIONAL COST TO THE ATTENTION OF THE OWNER AND ENGINEER AS SOON AS THEY ARE DISCOVERED SO THAT THEY CAN BE PROPERLY DOCUMENTED. FAILURE TO NOTIFY OR COVERING UN-WITNESSED WORK SHALL RESULT IN REJECTION OF CLAIMS FOR ADDITIONAL COMPENSATION.
3. PROTECT ALL STRUCTURES AND LANDSCAPE NOT LABELED FOR DEMOLITION FROM DAMAGE DURING CONSTRUCTION. ANY ON-SITE OR OFF-SITE AREAS DISTURBED DIRECTLY OR INDIRECTLY DUE TO CONSTRUCTION SHALL BE RETURNED TO A CONDITION EQUAL TO OR BETTER THAN THE EXISTING CONDITION. CONTRACTOR IS SOLELY RESPONSIBLE FOR ANY CIVIL PENALTIES RESULTING FROM THEIR WORK UNDER THIS CONTRACT.
4. LIMIT CONSTRUCTION ACTIVITIES TO THE CONSTRUCTION LIMITS SHOWN ON THE PLAN. IF WORK NEEDS TO EXTEND TO PUBLIC STREETS IT IS THE CONTRACTOR'S RESPONSIBILITY TO APPLY FOR ALL PERMITS, PREPARE ALL DRAWINGS AND PAY ALL FEES AND COSTS. ALL CONSTRUCTION ACTIVITIES SHALL COMPLY WITH LOCAL ORDINANCES.
5. SILT FENCE, CONSTRUCTION ENTRANCE AND FIBER LOGS SHALL BE IN PLACE PRIOR TO COMMENCEMENT OF DEMOLITION OPERATIONS. SEE SHEET CG200 SERIES FOR ALL EROSION CONTROL MEASURES AND APPROPRIATE STAGING.
6. PROVIDE NECESSARY BARRICADES, SUFFICIENT LIGHTS, SIGNS AND OTHER TRAFFIC CONTROL METHODS AS MAY BE NECESSARY FOR THE PROTECTION AND SAFETY OF THE PUBLIC AND MAINTAIN THROUGHOUT THE LIFE OF THE PROJECT.
7. EXISTING MATERIALS SHALL BE REMOVED FROM THE SITE IN ACCORDANCE WITH ALL LOCAL, COUNTY, STATE AND FEDERAL REQUIREMENTS. ABATEMENT OF ANY MATERIALS DETERMINED BY THE ENVIRONMENTAL ENGINEER TO BE HAZARDOUS SHALL BE REMOVED IN ACCORDANCE WITH APPROPRIATE REQUIREMENTS.
8. REMOVE ALL EXISTING SURFACE SITE FEATURES INCLUDING, BUT NOT LIMITED TO, CONCRETE AND BITUMINOUS PAVING, CONCRETE AND BITUMINOUS CURBING, WALKWAYS, FENCING, RETAINING WALLS, SCREEN WALLS, CONCRETE APRONS, SITE LIGHTING AND RELATED FOUNDATIONS, SITE SPECIFIC SIGNAGE AND RELATED FOUNDATIONS, BOLLARDS, LANDSCAPING, AND STAIRWAYS WITHIN THE CONSTRUCTION LIMITS UNLESS NOTED OTHERWISE.
9. COORDINATE WITH ALL PRIVATE UTILITY OWNERS FOR THE TERMINATION OF EXISTING ELECTRIC, TELEPHONE, CATV, ETC. SERVICES TO THE SITE. RE-USE OF ANY EXISTING SERVICES TO BE AT THE DISCRETION OF THE UTILITY OWNER.
10. RELOCATION OF UTILITIES SHALL BE COORDINATED WITH THE LOCAL UTILITY COMPANIES. ELECTRIC HANDHOLES, PULLBOXES, POWERPOLES, GUYLINES, AND STRUCTURES DISTURBED BY CONSTRUCTION ACTIVITIES TO BE RESTORED IN ACCORDANCE WITH SPECIFIC OWNER REQUIREMENTS AT CONTRACTORS EXPENSE.
11. REFER TO LANDSCAPE PLANS LD100 TO LD102 FOR TREE PRESERVATION AND REMOVAL PLANS FOR EXTENT OF TREE REMOVAL.

LEGEND

- REMOVE BUILDING
- REMOVE BITUMINOUS
- REMOVE CONCRETE
- REMOVE TREES & VEGETATION
  SEE TREE PRESERVATION AND REMOVAL PLAN
- CONSTRUCTION LIMITS

Know what's below. Call before you dig.

100 300
SCALE IN FEET

NEW REGIONAL MEDICAL EXAMINER FACILITY
MINNETONKA, MN

HENNEPIN COUNTY
A 2208 GOVERNMENT CENTER
300 SOUTH 6TH STREET
MINNEAPOLIS, MN 55487
COUNTY PROJECT NO. 1002306

LEO A DALY
730 SECOND AVE SOUTH, SUITE 1300,
MINNEAPOLIS, MN 55402-2455
T: 612.338.8741

LABORATORY EQUIPMENT DESIGN
MCCLAREN, WILSON & LAWRIE
11798 N LAKERIDGE PKWY.,
ASHLAND, VA 23005 T: 804-228-7473

CIVIL ENGINEERING
ELAN DESIGN LAB
901 NORTH THIRD STREET, SUITE 120,
MINNEAPOLIS, MN 55401 T: 612-260-7980

LANDSCAPE ARCHITECTURE
DAMON FARBER
401 SECOND AVE NORTH, SUITE 410,
MINNEAPOLIS, MN 55401 T:612-332-7522

TELECOMMUNICATIONS ENGINEERING
TRUE NORTH CONSULTING
140 THIRD STREET SOUTH,
STILLWATER, MN 55082 T:651-705-1231

KEY PLAN

REVISIONS

NO.	DESCRIPTION	DATE

FILE LOG

ACTIVITY	BY
Manager	MJW
Design	SMJ
Draw	LTR
Check	LAD

STAMP

NOT FOR CONSTRUCTION

CITY SUBMITTAL

ELAN Project No. LAD18010
08/15/2019

OVERALL DEMOLITION PLAN

CD100

VOLUME 1

CITY SUBMITTAL

Copyright © 2018 LEO A DALY Company

A1 DEMOLITION PLAN
1" = 30'

DEMOLITION NOTES

1. SEE SHEET CD100 FOR DEMOLITION NOTES AND LEGEND.

Know what's below. Call before you dig.

30 90
SCALE IN FEET

NEW REGIONAL MEDICAL EXAMINER FACILITY
MINNETONKA, MN

HENNEPIN COUNTY
A 2208 GOVERNMENT CENTER
300 SOUTH 6TH STREET
MINNEAPOLIS, MN 55487
COUNTY PROJECT NO. 1002306

LEO A DALY
730 SECOND AVE SOUTH, SUITE 1300,
MINNEAPOLIS, MN 55402-2455
T: 612.338.8741

LABORATORY EQUIPMENT DESIGN
MCCLAREN, WILSON & LAWRIE
11798 N LAKERIDGE PKWY.,
ASHLAND, VA 23005 T: 804-228-7473

CIVIL ENGINEERING
ELAN DESIGN LAB
901 NORTH THIRD STREET, SUITE 120.
MINNEAPOLIS, MN 55401 T: 612-260-7980

LANDSCAPE ARCHITECTURE
DAMON FARBER
401 SECOND AVE NORTH, SUITE 410,
MINNEAPOLIS, MN 55401 T:612-332-7522

TELECOMMUNICATIONS ENGINEERING
TRUE NORTH CONSULTING
140 THIRD STREET SOUTH,
STILLWATER, MN 55082 T:651-705-1231

KEY PLAN

REVISIONS

NO.	DESCRIPTION	DATE

FILE LOG

ACTIVITY	BY
Manager	MJW
Design	SMJ
Draw	LTR
Check	LAD

STAMP

NOT FOR CONSTRUCTION

CITY SUBMITTAL

ELAN Project No. LAD18010
08/15/2019

DEMOLITION PLAN

CD101

VOLUME 1

CITY SUBMITTAL

Copyright © 2018 LEO A DALY Company

A1 OVERALL SITE PLAN
1" = 100'

SITE PLAN NOTES

1. VERIFY ALL FIELD CONDITIONS AND UTILITY LOCATIONS PRIOR TO EXCAVATION/CONSTRUCTION. IF ANY DISCREPANCIES OR UNKNOWN UTILITIES ARE FOUND THAT IMPACT DESIGN OR IMPAIR CONSTRUCTION, THE ENGINEER AND OWNER SHOULD BE IMMEDIATELY NOTIFIED.
2. DIMENSIONS SHOWN ON THIS PLAN ARE TO FACE OF CURB OR EDGE OF PAVEMENT AND EXTERIOR FACE OF BUILDING UNLESS NOTED OTHERWISE.
3. MEET AND MATCH EXISTING CONDITIONS. PROVIDE TRANSITION AS NECESSARY.
4. ON-SITE CURB TO BE B612 CONCRETE CURB & GUTTER.
5. ALL CURBS TO HAVE 3/4" EXPANSION JOINTS AT A MAXIMUM OF 100'-0" AND CONTROL JOINTS AT A MAXIMUM OF 10'-0".
6. ALL PARKING STALLS TO BE PAINTED WITH A 4" WIDE WHITE STRIPING. ACCESSIBLE SYMBOLS TO BE PAINTED IN WHITE AND ACCESSIBLE ACCESS AISLES TO BE PAINTED WITH A 4" WIDE WHITE PAINTED STRIPE 18 INCHES ON CENTER AND AT 45 DEGREE ANGLES TO STALL, WITH "NO PARKING" MARKED. REFLECTORIZED PAINT SHALL COMPLY WITH MNDOT 3592.

PROJECT SUMMARY

PROPERTY AREA SUMMARY

PROPERTY AREA	160.263 AC.
EXISTING IMPERVIOUS	14.662 AC. (9%)
EXISTING IMPERVIOUS DISTURBED	1.940 AC. (13% OF EXISTING IMPERVIOUS)
POST DEVELOPMENT IMPERVIOUS	16.331 AC. (11% INCREASE FROM EXISTING)

DISTURBED AREA SUMMARY

TOTAL DISTURBED AREA	8.735 AC.	
IMPERVIOUS		3.609 AC.
TOTAL BUILDING AREA		1.559 AC. (67,922 SF. +/-)
PROPOSED BUILDING		1.281 AC. (55,795 SF. +/-)
FUTURE NORTH ADDITION		0.192 AC. (8,383 SF. +/-)
FUTURE SOUTH ADDITION		0.086 AC. (3,744 SF. +/-)
PARKING, WALK, & TRASH		2.050 AC.
PERVIOUS AREA		5.126 AC.

PARKING SUMMARY

REQUIRED

MUNICIPAL BUILDING	10 SPACES + 1 SPACE / 500 GFA, + 1 SPACES / VEHICLE PREMISED CUSTOMER
GENERAL OFFICE	1 SPACE / 250 GFA. (REQUIRED MIN. 10 SPACES)

PROPOSED 78 STALLS

8'X18' ACCESSIBLE STALL	4 STALLS
9'X18' STANDARD STALL	74 STALLS

LEGEND

- WETLAND
- PERVIOUS AREA
- CONCRETE PAVEMENT
- CONCRETE CURB & GUTTER
- RETAINING WALL
- SCREENING WALL
- WETLAND BUFFER
- STORMWATER FACILITY
- CONSTRUCTION LIMITS

Know what's below. Call before you dig.

100 300
SCALE IN FEET

NEW REGIONAL MEDICAL EXAMINER FACILITY
MINNETONKA, MN

HENNEPIN COUNTY
A 2208 GOVERNMENT CENTER
300 SOUTH 6TH STREET
MINNEAPOLIS, MN 55487
COUNTY PROJECT NO. 1002306

LEO A DALY
730 SECOND AVE SOUTH, SUITE 1300,
MINNEAPOLIS, MN 55402-2455
T: 612.338.8741

LABORATORY EQUIPMENT DESIGN
MCCLAREN, WILSON & LAWRIE
11798 N LAKERIDGE PKWY.
ASHLAND, VA 23005 T: 804-228-7473

CIVIL ENGINEERING
ELAN DESIGN LAB
901 NORTH THIRD STREET., SUITE 120.
MINNEAPOLIS, MN 55401 T: 612-260-7980

LANDSCAPE ARCHITECTURE
DAMON FARBER
401 SECOND AVE NORTH, SUITE 410,
MINNEAPOLIS, MN 55401 T:612-332-7522

TELECOMMUNICATIONS ENGINEERING
TRUE NORTH CONSULTING
140 THIRD STREET SOUTH,
STILLWATER, MN 55082 T:651-705-1231

KEY PLAN

REVISIONS

NO.	DESCRIPTION	DATE

FILE LOG

ACTIVITY	BY
Manager	MJW
Design	SMJ
Draw	LTH
Check	LAD

STAMP

NOT FOR CONSTRUCTION

ELAN Project No. LAD18010
08/15/2019

OVERALL SITE PLAN

CS100

VOLUME 1

CITY SUBMITTAL

Copyright © 2018 LEO A DALY Company

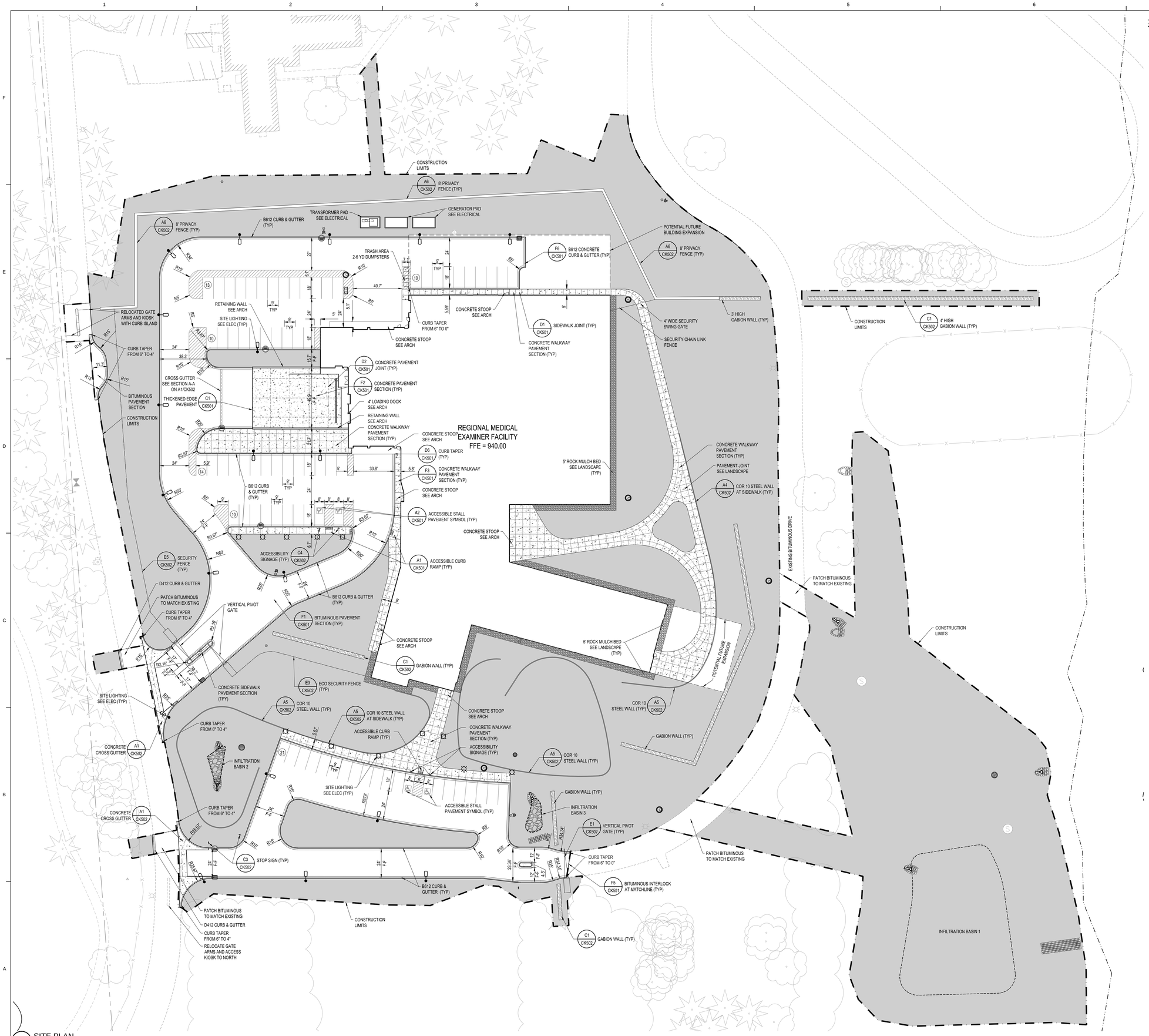

A1 SITE PLAN
1" = 30'

SITE PLAN NOTES

1. SEE SHEET CS100 FOR SITE PLAN NOTES, SUMMARY AND LEGEND.

VOLUME 1

NEW REGIONAL MEDICAL EXAMINER FACILITY
MINNETONKA, MN

HENNEPIN COUNTY
A 2208 GOVERNMENT CENTER
300 SOUTH 6TH STREET
MINNEAPOLIS, MN 55487
COUNTY PROJECT NO. 1002306

LEO A DALY
730 SECOND AVE SOUTH, SUITE 1300,
MINNEAPOLIS, MN 55402-2455
T: 612.338.8741

LABORATORY EQUIPMENT DESIGN
MCCLAREN, WILSON & LAWRIE
11798 N LAKERIDGE PKWY.
ASHLAND, VA 23005 T: 804-228-7473

CIVIL ENGINEERING
ELAN DESIGN LAB
901 NORTH THIRD STREET, SUITE 120
MINNEAPOLIS, MN 55401 T: 612-260-7980

LANDSCAPE ARCHITECTURE
DAMON FARBER
401 SECOND AVE NORTH, SUITE 410,
MINNEAPOLIS, MN 55401 T:612-332-7522

TELECOMMUNICATIONS ENGINEERING
TRUE NORTH CONSULTING
140 THIRD STREET SOUTH,
STILLWATER, MN 55082 T:651-705-1231

KEY PLAN

REVISIONS

NO.	DESCRIPTION	DATE

FILE LOG

ACTIVITY	BY
Manager	MJW
Design	SMJ
Draw	LTH
Check	LAD

STAMP

NOT FOR CONSTRUCTION

ELAN Project No. LAD18010
08/15/2019

SITE PLAN

CS101

CITY SUBMITTAL

Know what's below. Call before you dig.

30 90
SCALE IN FEET

Copyright © 2018 LEO A DALY Company

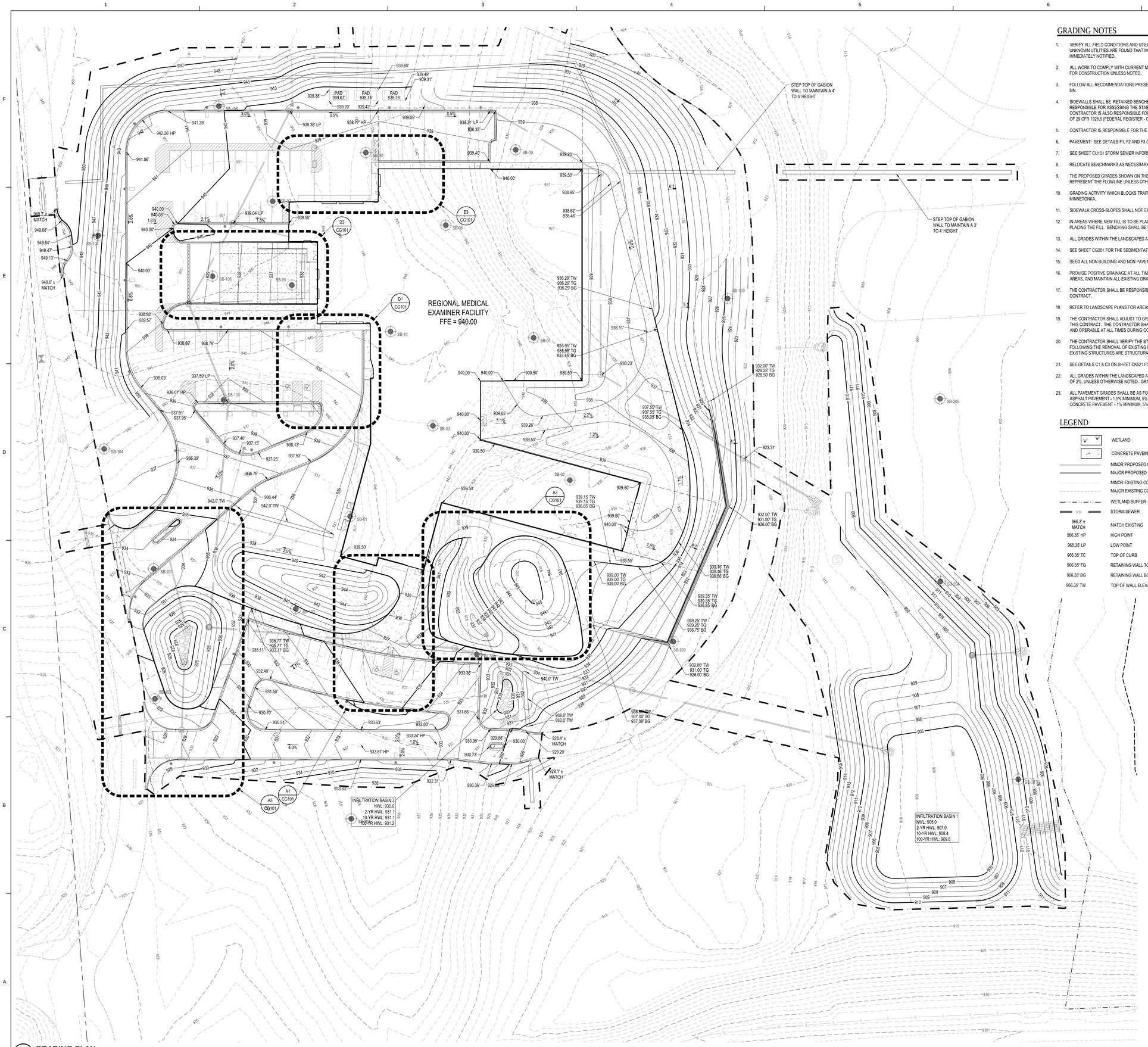

A1 GRADING PLAN
1" = 30'

GRADING NOTES

1. VERIFY ALL FIELD CONDITIONS AND UTILITY LOCATIONS PRIOR TO EXCAVATION/CONSTRUCTION. IF ANY DISCREPANCIES OR UNKNOWN UTILITIES ARE FOUND THAT IMPACT DESIGN OR IMPAIR CONSTRUCTION, THE ENGINEER AND OWNER SHOULD BE IMMEDIATELY NOTIFIED.
2. ALL WORK TO COMPLY WITH CURRENT MINNESOTA DEPARTMENT OF TRANSPORTATION (MNDOT) STANDARD SPECIFICATIONS FOR CONSTRUCTION UNLESS NOTED.
3. FOLLOW ALL RECOMMENDATIONS PRESENTED IN GEOTECHNICAL EVALUATION REPORT PREPARED BY INTERTEK PSI, EAGAN, MN.
4. SIDEWALLS SHALL BE RETAINED BENCHED OR SLOPED TO PROVIDE SAFE WORKING CONDITIONS. THE CONTRACTOR IS SOLELY RESPONSIBLE FOR ASSESSING THE STABILITY OF AND EXECUTING PROJECT EXCAVATIONS USING SAFE METHODS. THE CONTRACTOR IS ALSO RESPONSIBLE FOR NAMING THE "COMPETENT INDIVIDUAL" AS PER SUBPART P OF 29 CFR 1926.6 (FEDERAL REGISTER - OSHA).
5. CONTRACTOR IS RESPONSIBLE FOR THE DESIGN OF SOIL, UTILITY AND BUILDING RETENTION SYSTEMS.
6. PAVEMENT: SEE DETAILS F1, F2 AND F3 ON SHEET CK501 FOR PAVEMENT SECTIONS.
7. SEE SHEET CU101 STORM SEWER INFORMATION
8. RELOCATE BENCHMARKS AS NECESSARY WITH NEW BENCHMARK LOCATIONS WITHIN A TOLERANCE OF 0.010 VERTICAL FEET.
9. THE PROPOSED GRADES SHOWN ON THE GRADING PLAN ARE FINISHED GRADES. SPOT ELEVATIONS ALONG CURB LINES REPRESENT THE FLOWLINE UNLESS OTHERWISE NOTED.
10. GRADING ACTIVITY WHICH BLOCKS TRAFFIC OF ANY STREET, ALLEY, OR DRIVE IS SUBJECT TO APPROVAL BY THE CITY OF MINNETONKA.
11. SIDEWALK CROSS-SLOPES SHALL NOT EXCEED 2.0%.
12. IN AREAS WHERE NEW FILL IS TO BE PLACED ON SLOPING GROUND, BENCHING THE SURFACE SHALL BE COMPLETED PRIOR TO PLACING THE FILL. BENCHING SHALL BE COMPLETED WHERE SLOPES ARE STEEPER THAN 4:1 (HORIZONTAL:VERTICAL).
13. ALL GRADES WITHIN THE LANDSCAPED AREA SHALL NOT EXCEED 4 HORIZONTAL TO 1 VERTICAL UNLESS OTHERWISE NOTED.
14. SEE SHEET CG201 FOR THE SEDIMENTATION AND EROSION CONTROL PLAN.
15. SEED ALL NON BUILDING AND NON PAVEMENT AREAS FOLLOWING FINAL GRADING ACTIVITIES PER THE LANDSCAPE PLANS.
16. PROVIDE POSITIVE DRAINAGE AT ALL TIMES WITHIN THE CONSTRUCTION AREA. DO NOT ALLOW WATER TO POND IN EXCAVATION AREAS, AND MAINTAIN ALL EXISTING DRAINAGE PATTERNS.
17. THE CONTRACTOR SHALL BE RESPONSIBLE TO COMPLY WITH ALL OSHA REGULATIONS IN THE EXECUTION OF WORK UNDER THIS CONTRACT.
18. REFER TO LANDSCAPE PLANS FOR AREAS TO RECEIVE PERMANENT SEED, SOD, TREES, AND SHRUBS, ETC.
19. THE CONTRACTOR SHALL ADJUST TO GRADE ALL UTILITY STRUCTURES AND APPURTENANCES THAT FALL WITHIN THE LIMITS OF THIS CONTRACT. THE CONTRACTOR SHALL KEEP ALL SAID EXISTING UTILITIES AND THEIR APPURTENANCES FREE OF DEBRIS AND OPERABLE AT ALL TIMES DURING CONSTRUCTION.
20. THE CONTRACTOR SHALL VERIFY THE STRUCTURAL INTEGRITY OF EXISTING STORM STRUCTURES AT THE NEW PIPE TIE-INS FOLLOWING THE REMOVAL OF EXISTING PIPE AND CREATION OF NEW PIPE OPENINGS. CONTACT THE ENGINEER IF THE EXISTING STRUCTURES ARE STRUCTURALLY UNSTABLE.
21. SEE DETAILS C1 & C3 ON SHEET CK521 FOR PIPE BEDDING.
22. ALL GRADES WITHIN THE LANDSCAPED AREA SHALL NOT EXCEED 4 HORIZONTAL TO 1 VERTICAL AND HAVE A MINIMUM GRADE OF 2%, UNLESS OTHERWISE NOTED. GRADED SWALES MUST HAVE A MINIMUM BOTTOM SLOPE OF 0.5%.
23. ALL PAVEMENT GRADES SHALL BE AS FOLLOWS:
    ASPHALT PAVEMENT - 1.5% MINIMUM, 5% MAXIMUM
    CONCRETE PAVEMENT - 1% MINIMUM, 5% MAXIMUM

LEGEND

	WETLAND
	CONCRETE PAVEMENT
	MINOR PROPOSED CONTOUR
	MAJOR PROPOSED CONTOUR
	MINOR EXISTING CONTOUR
	MAJOR EXISTING CONTOUR
	WETLAND BUFFER
>>	STORM SEWER
966.3' ± MATCH	MATCH EXISTING
966.35' HP	HIGH POINT
966.35' LP	LOW POINT
966.35' TC	TOP OF CURB
966.35' TG	RETAINING WALL TOP GRADE
966.35' BG	RETAINING WALL BOTTOM GRADE
966.35' TW	TOP OF WALL ELEVATION

NPDES AREA SUMMARY

	EXISTING	PROPOSED
IMPERVIOUS		
BUILDING	0.657 ACRES	1.559 ACRES**
PAVEMENT	1.283 ACRES	2.050 ACRES
TOTAL IMPV	1.940 ACRES	3.609 ACRES
PERVIOUS	6.795 ACRES	5.126 ACRES
TOTAL	8.735 ACRES	8.735 ACRES

**BUILDING TOTAL INCLUDES THE NORTH AND EAST FUTURE ADDITIONS WHICH EQUAL 0.278 ACRES

30 90
SCALE IN FEET

Know what's below. Call before you dig.

NEW REGIONAL MEDICAL EXAMINER FACILITY
MINNETONKA, MN

HENNEPIN COUNTY
A 2208 GOVERNMENT CENTER
300 SOUTH 6TH STREET
MINNEAPOLIS, MN 55487
COUNTY PROJECT NO. 1002306

LEO A DALY
730 SECOND AVE SOUTH, SUITE 1300,
MINNEAPOLIS, MN 55402-2455
T: 612.338.8741

LABORATORY EQUIPMENT DESIGN
MCCLAREN, WILSON & LAWRIE
11798 N LAKERIDGE PKWY.
ASHLAND, VA 23005 T: 804-228-7473

CIVIL ENGINEERING
ELAN DESIGN LAB
901 NORTH THIRD STREET, SUITE 120
MINNEAPOLIS, MN 55401 T: 612-260-7980

LANDSCAPE ARCHITECTURE
DAMON FARBER
401 SECOND AVE NORTH, SUITE 410,
MINNEAPOLIS, MN 55401 T:612-332-7522

TELECOMMUNICATIONS ENGINEERING
TRUE NORTH CONSULTING
140 THIRD STREET SOUTH,
STILLWATER, MN 55082 T:651-705-1231

KEY PLAN

REVISIONS

NO.	DESCRIPTION	DATE

FILE LOG

ACTIVITY	BY
Manager	MJW
Design	SMJ
Draw	LTH
Check	LAD

STAMP

NOT FOR CONSTRUCTION

CITY SUBMITTAL

ELAN Project No. LAD18010
08/15/2019

GRADING PLAN

CG101

VOLUME 1

CITY SUBMITTAL

Copyright © 2018 LEO A DALY Company

Project Name / Location

Project Name	Regional Medical Examiner Building
Project Address	14300 County Road 62, Minnetonka, MN
Property ID	3411722310001
Latitude / Longitude	44.893951, -93.461397
Project Type	Government Building

Contacts

Owner	Contractor (Operator)	Preparer
Gail Manning	TBD	Marcelle Weslock, PE
Hennepin County		Élan Design Lab, Inc.
300 South 6th Street		901 N 3rd St.
Minneapolis, MN 55487		Suite 120
		Minneapolis, MN 55401
612-348-4079		612-260-7981
Gail.manning@hennepin.us		mweslock@elanlab.com
		SWPPP Design Certification Expires 2020

General SWPPP Responsibilities

The Contractor (Operator) shall provide a knowledgeable and experienced person(s) to oversee the implementation of the SWPPP and the installation. Inspection and maintenance of the erosion and sediment control BMP's before and during construction. Training must be in conformance with the NPDES Construction Permit requirements. Training documentation must kept on-site with the SWPPP and the trained person must be available on-site within 72 hours.

Both the Owner and Contractor (Operator) shall be responsible for the proper termination and/or transfer of the permit.

The Owner will be responsible for the long term operation and maintenance of the permanent storm water management system(s).

Unless specifically stated the engineer (Preparer) shall have no responsibility for any SWPPP activities during or after construction.

Project Description

The project consists of a new regional Medical Examiner Building located on a parcel shared with Hennepin County Home School at the northeast quadrant of County Road 62 and Eden Prairie Road east of the Glen Lake Golf Course in Minnetonka, Minnesota. The building will be a two-story, 56,000 sf facility with a full loading dock, as well as drive through door for deliveries. The new building will replace three existing County Home School cottages located west of the main wetland and south of the main County Home School site. There is two parking lots with the southern lot for visitors and the northern lot will be behind a motorized gate for staff and authorized personnel. Access will be from the existing County Home School entrance road. The existing ring road will remain operational.

Soils

The Geotechnical Exploration and Engineering Review is being completed by Intertek and will be incorporated into this SWPPP upon completion. The draft boring logs were reviewed for preliminary information for design. The borings indicates the native soil consists primarily of poorly graded sand (SP) and silty sand (SM) underneath some organic material, unclassified fill, silty sand (SC) and sandy lean clay (CL).

Receiving Waters

The entire new regional medical examiner facility site drains to the existing wetland within the Glen Lake Outlet subwatershed of the south branch of Nine Mile Creek that ultimately flows to the Minnesota River. This portion of Nine Mile Creek is not listed as an impaired or special water on the MPCA database. There is no other impaired water listed within one mile downstream of the site.

Project Plans

The following plan sheets are hereby incorporated into this SWPPP

Sheet Number	Description	Date
CG101	Grading Plan	08/15/2019
CG200	SWPPP	08/15/2019
CG201	Sediment & Erosion Control Plan	08/15/2019
CG401	Enlarged Grading Plans	08/15/2019
CU101	Utility Plan	08/15/2019
CK511	Erosion Control & Storm Sewer Details	08/15/2019
CK521	Utility Details	08/15/2019

Stormwater Related Reviews and Permits

Agency	Type of Permit or Review	Status
City of Minnetonka	Site Plan Review, Building Permit	Pending
Nine Mile Creek Watershed District	Stormwater Management, Wetland Buffers	Pending
MPCA	Construction Stormwater	To be acquired by contractor

Stormwater Management System Overview

See Stormwater Management Plan incorporated herein by reference for details on system design, flow rates, volumes and system capacities. In general runoff is collected by a new storm sewer system consisting of ditches, catch basins and a pipe network which direct the runoff to multiple stormwater basins. The runoff infiltrates the 10-year runoff event and would runoff to the main wetland in a larger events. The system reduces the runoff from the site under the 2, 10, and 100 year events.

See Operations and Maintenance Manual for post construction system maintenance requirements.

Erosion Prevention Measures - General

The Contractor (Operator) is responsible for all erosion prevention measures for the project including but are not limited to the following:

1. The Contractor (Operator) shall plan and implement appropriate construction practice and construction phasing to minimize erosion and retain vegetation whenever possible
2. All areas not to be disturbed shall be delineated with flags, stakes, signs, or other means necessary to protect these areas before construction begins on the site.
3. All drainage ditches and/or swales shall have temporary or permanent stabilization within 24 hours of connecting to a surface water or 24 hours after construction activity in the ditch/swale has temporarily or permanently ceased.
4. All pipe outlets shall have temporary or permanent energy dissipation within 24 hours of connecting to a surface water.
5. All exposed soils shall be stabilized as soon as possible to limit soil erosion. In no case shall un-worked areas, including stock piles, have exposed soils for more than 7 days without providing temporary or permanent stabilization.

Sediment Control Measures and Timing - General

The Operator (Contractor) is responsible for all sediment control measures for the project. Sediment control measures include but are not limited to the following:

1. Sediment control measures shall be established on all down gradient perimeters before any up-gradient land disturbing activities begin. These measures shall remain in place until final stabilization has been established.
2. On slopes with 3:1 or steeper grades there shall be no unbroken slope length greater than 75 feet.
3. All storm drain inlets and culvert inlets shall be protected by an appropriate BMP during construction until all sources with potential for discharging to the inlet has been stabilized. Inlet and culvert protection shall conform to the MnDOT Specifications 2573 and 3891.
4. Stock piles shall be provided with an effective sediment perimeter control and shall not be placed in any type of surface water or drainageway.
5. Vehicle tracking shall be minimized with effective BMP's. Where the BMP's fail to prevent sediment from tracking onto streets the Contractor shall conduct street sweeping to remove all tracked sediment.
6. The Operator is responsible for identifying the need for temporary sediment basins based on actual field conditions to protect downstream resources. Temporary sediment basins shall be constructed before up gradient vegetation is disturbed and maintained until the risk of damage to downstream resources is mitigated by other means.

Dewatering and Basin Draining Activities - General

The Operator is responsible for adhering to all dewatering and surface drainage regulations, including but not limited to the following:

1. Whenever possible water from dewatering activities shall discharge to a temporary and/or permanent sediment basin.
2. If water cannot be discharged to a sedimentation basin, it shall be treated with other appropriate BMP's, to effectively remove sediment.
3. All discharge points shall be protected from erosion and scour.
4. Discharge water shall be dispersed over an effective energy dissipation measure.
5. All water from dewatering shall be discharged in a manner that does not cause nuisance conditions, erosion, or inundation of wetlands. Water shall not be discharged to adjacent residential properties. It must be discharged to the public street.

Final Stabilization - General

The Operator is responsible for ensuring final stabilization of the site, including but is not limited to the following:

1. All soil disturbing activities have been completed.
2. All exposed soils have been uniformly stabilized with of least 80% perennial vegetation.
3. All drainage ditches, ponds and all storm water conveyance systems have been cleared of sediment and stabilized to preclude erosion.

Temporary Sediment Basin

During construction the contractor shall excavate and maintain temporary sediment basins as needed to prevent sediment from reaching permanent infiltration areas, natural depressions, adjacent residential properties and other environmentally sensitive areas.

Construction Sequencing

Contractor shall comply with the following sequence. Contractor may make adjustments to the sequence if needed to address their means and methods and unanticipated field conditions.

1. Install rock construction entrance, rumble racks or some other suitable device. Two locations have been shown on the plan, a minimum of one is required.
2. Perform clearing and grubbing only to the extent necessary to install perimeter silt fence.
3. Install perimeter silt fence and other barriers at a minimum as indicated on the plan. The contractor is responsible for any additional sediment control that is needed.
4. Complete clearing and grubbing.
5. Construct infiltration basins 2 & 3 per plan, seed and stabilize slopes. Minimize runoff to basin until perennial vegetation is established. Basins may be utilized for temporary sediment control basins.
6. Establish permanent slopes on north, west and east sides of building. Stabilize slope with permanent seed and fiber blankets, as shown on erosion control plan.
7. Construct east infiltration basin 1 per plan, seed and stabilize slopes. Minimize runoff to basin until perennial vegetation is established.
8. Strip, segregate and stockpile topsoil. Surround stockpiles with silt fence and temporary seed and mulch the stockpiles.
9. Begin building construction.
10. Complete site grading. Stockpile excess material as indicated on the plan.
11. Re-spread topsoil in disturbed areas outside of building and pavement areas. Establish perennial vegetation with seed and mulch or fiber blankets as indicated on the plans.
12. Provide temporary erosion control seeding and mulch where active construction is not taking place.
13. Install site utilities.
14. Upon completion of the building foundation and concurrent with finishing the building, install permanent parking lot and complete access drive.
15. Flush storm sewer system. Remove any sediment flumes.
16. Clean out sediment from basins 2 and 3 and install trap boulders per plan.
17. Monitor vegetation and reinstall as needed until fully established.
18. Remove sediment barriers.
19. File NPDES Notice of Termination ("NOT") with MPCA within 30 days of final stabilization.

Inspection and maintenance

All inspections, maintenance, repairs, replacements and removal are to be considered incidental to the BMP bid items.

The Contractor (Operator) is responsible for completing required inspections maintenance and observation of weather conditions and rainfall amounts to ensure compliance with the permit requirements. The Contractor (Operator) shall observe the construction site once every seven (7) days during active construction and within 24 hours after a rainfall event greater than 0.5 inches in 24 hours.

The Contractor (Operator) shall keep a summary maintenance/construction observation report to be recorded after each site visit/observation. The Contractor (Operator) shall submit a copy of the written inspections monthly to the Owner. Records shall include the following:

1. Date and time of inspections
2. Name of person conducting inspection
3. Findings and recommendations for corrective actions if necessary
4. Corrective actions taken
5. Date and amount of rainfalls greater than 0.5 inches in 24 hours
6. Mention of any changes made to the SWPPP
7. A site map indicating active construction areas and land disturbing activities.

The Contractor (Operator) must keep the SWPPP, all inspection reports and amendments onsite. The Contractor (Operator) shall designate a specific location to keep the records whenever construction activity is in progress.

All erosion prevention and sedimentation control BMP's must be inspected to ensure integrity and effectiveness. All nonfunctional BMP's must be repaired, replaced or supplemented with functional BMP's. The Contractor (Operator) must investigate and comply with the following inspection and maintenance requirements:

1. All sediment barriers including silt fence, filter logs, and similar devices must be repaired replaced or supplemented when they become nonfunctional or the sediment reaches 1/3 of the barrier height. These repairs shall be made within 24 hours of discovery.
2. Temporary and permanent sediment basins must be drained and the sediment removed when the depth of sediment collected in the basin reaches 1/2 the storage volume. Drainage and removal must be completed within 72 hours of discovery.
3. Surface waters, including drainage ditches and conveyance systems, must be inspected for evidence of erosion and sediment deposition. The Operator shall remove all deltas and sediment deposited in surface waters, including drainage ways, catch basins, and other drainage systems. The Operator shall re-stabilize the areas where sediment removal results in exposed soil. Removal and stabilization must take place within 7 days of discovery, unless precluded by legal, regulatory or physical constraints. The Contractor (Operator) is responsible for contacting all local, regional, state and federal authorities and receiving any applicable permits, prior to conducting any work.
4. Construction site vehicle exit locations shall be inspected daily for evidence of off-site sediment tracking onto paved surfaces. Tracked sediment must be removed from all paved surfaces within 24 hours of discovery.
5. The Contractor (Operator) is responsible for the operation and maintenance of temporary and permanent water quality BMP's. As well as erosion and sediment control BMP's for the duration of the construction work at the site.
6. If sediment escapes the construction site, all off-site accumulations of sediment must be removed in a manner and at a frequency sufficient to minimize off-site impacts.
7. All filtration areas must be inspected to ensure that no sediment from ongoing construction activities is reaching the filtration areas and these areas are protected from compaction due to construction equipment driving across the filtration area.
8. The Contractor is solely responsible for all costs associated with reconstructing the infiltration basin when the functionality is compromised by the contractor's actions or inaction to protect the basin.

Pollution Prevention Management Measures

The Contractor (Operator) shall be responsible for all pollution prevention management measures. The Contractor (Operator) is responsible for informing all visitors and/or personnel on-site of the pollution prevention management measures.

All pollution prevention management measures are to be considered incidental to the overall project bid, unless otherwise noted. Pollution prevention management measures include but are not limited to the following:

1. The Contractor (Operator) is responsible for the proper disposal, in compliance with MPCA disposal requirements, of all solid or liquid waste and hazardous materials on-site.
2. Concrete trucks shall not be allowed to wash out or discharge surplus concrete or drum wash water on-site, unless done in an engineered leak-proof containment system. The engineered system provided by the Contractor (Operator) must include site drawings for the project file and written assurance that the system will work as designed and leave no discharge of concrete or concrete residue potential to waters of the state during a minimum of a 100-year storm event. A sign must be installed adjacent to each washout system to inform concrete equipment Operators to utilize the proper facilities. The concrete washout containment system and all related items shall be considered incidental to the project bid.
3. All nonhazardous waste materials shall be collected and stored in a securely lidded metal dumpster or other approved containment method at the end of each day. Any alternative to a metal dumpster must be submitted in writing for approval by the project engineer. The dumpster shall be emptied as necessary to function as intended for debris collection. No construction garbage or waste material shall be buried on-site.
4. A licensed sanitary waste management Contractor shall collect all sanitary waste from the portable units at a rate necessary to maintain designed function.
5. All fertilizers shall be stored in a covered shelter. Partially used bags shall be transferred to a sealable bin to reduce the chance of spillage.
6. External washing of trucks and other construction vehicles and engine degreasing are prohibited at the construction site. All vehicles on-site shall be monitored for leaks and receive regular prevention maintenance to reduce the chance of leakage. Petroleum products shall be stored in tightly sealed containers. Which are clearly labeled. Spill kits shall be included with all fueling sources and maintenance activities. Secondary containment measures shall be installed and maintained by the Operator.
7. Any asphalt substances used on-site shall be applied in accordance with manufacturer's recommendations.
8. All paint containers and curing compounds shall be tightly sealed and stored when not required for use. Excess paint and/or curing compounds shall not be discharged into the storm sewer system and shall be properly disposed of according to manufacturer's instruction.
9. Materials and equipment necessary for spill clean-up shall be kept in an enclosed trailer or shed on-site. Equipment shall include. But not limited to, brooms, mops, dust pans, rags, gloves, goggles, absorbent (kitty litter) oil absorbent booms and diapers and buckets.
10. All spills shall be contained and cleaned up immediately upon discovery. Spills large enough to reach the storm water conveyance system shall be reported to the Minnesota duty officer at 1-800-422-0798.

Quantities

Practice	Detail / Spec.	Unit	Quantity
Silt Fence	E1 /CK511	LF	1,795
Fiber Log Sediment Control	E3/CK511	LF	135
Rock Construction Entrance	A1/CK511	Each	2
Erosion Control Blanket	C1/CK511	SY	3,760
Inlet Protection	C3/CK511	Each	15
Sod & Landscaping	MnDOT 3878	SY	2,400
Seed (Stormwater Mix)	MnDOT MIX 33-261	SY	1,100
Seed (Dry Prairie General)	MnDOT MIX 35-221	SY	22,800

Post Construction Operation and Maintenance

Maintenance of the storm water management facilities will be the responsibility of the Owner and may be subject to an agreement with the Nine Mile Creek Watershed District. See Operation and Maintenance manual for guidance.

Amendments to the SWPPP

The SWPPP will be amended as needed and/or as required by provisions of the permit. Amendments will be approved by both the Owner and Contractor (Operator) and will be attached to the SWPPP as an additional sheet. The SWPPP and amendments will be kept on site by the Contractor (Operator) whenever construction activity is in progress.

A1 SWPPP

NEW REGIONAL MEDICAL EXAMINER FACILITY
MINNETONKA, MN

HENNEPIN COUNTY
A 2208 GOVERNMENT CENTER
300 SOUTH 6TH STREET
MINNEAPOLIS, MN 55487
COUNTY PROJECT NO. 1002306

LEO A DALY
730 SECOND AVE SOUTH, SUITE 1300,
MINNEAPOLIS, MN 55402-2455
T: 612.338.8741

LABORATORY EQUIPMENT DESIGN
MCCLAREN, WILSON & LAWRIE
11798 N LAKERIDGE PKWY.
ASHLAND, VA 23005 T: 804-228-7473

CIVIL ENGINEERING
ELAN DESIGN LAB
901 NORTH THIRD STREET, SUITE 120.
MINNEAPOLIS, MN 55401 T: 612-260-7980

LANDSCAPE ARCHITECTURE
DAMON FARBER
401 SECOND AVE NORTH, SUITE 410,
MINNEAPOLIS, MN 55401 T:612-332-7522

TELECOMMUNICATIONS ENGINEERING
TRUE NORTH CONSULTING
140 THIRD STREET SOUTH,
STILLWATER, MN 55082 T:651-705-1231

KEY PLAN

REVISIONS

NO.	DESCRIPTION	DATE

FILE LOG

ACTIVITY	BY
Manager	NJV
Design	SMJ
Draw	LTH
Check	LAD

STAMP

NOT FOR CONSTRUCTION

CITY SUBMITTAL

ELAN Project No. LAD18010
08/15/2019

SWPPP

CG200

VOLUME 1

CITY SUBMITTAL

Copyright © 2018 LEO A DALY Company

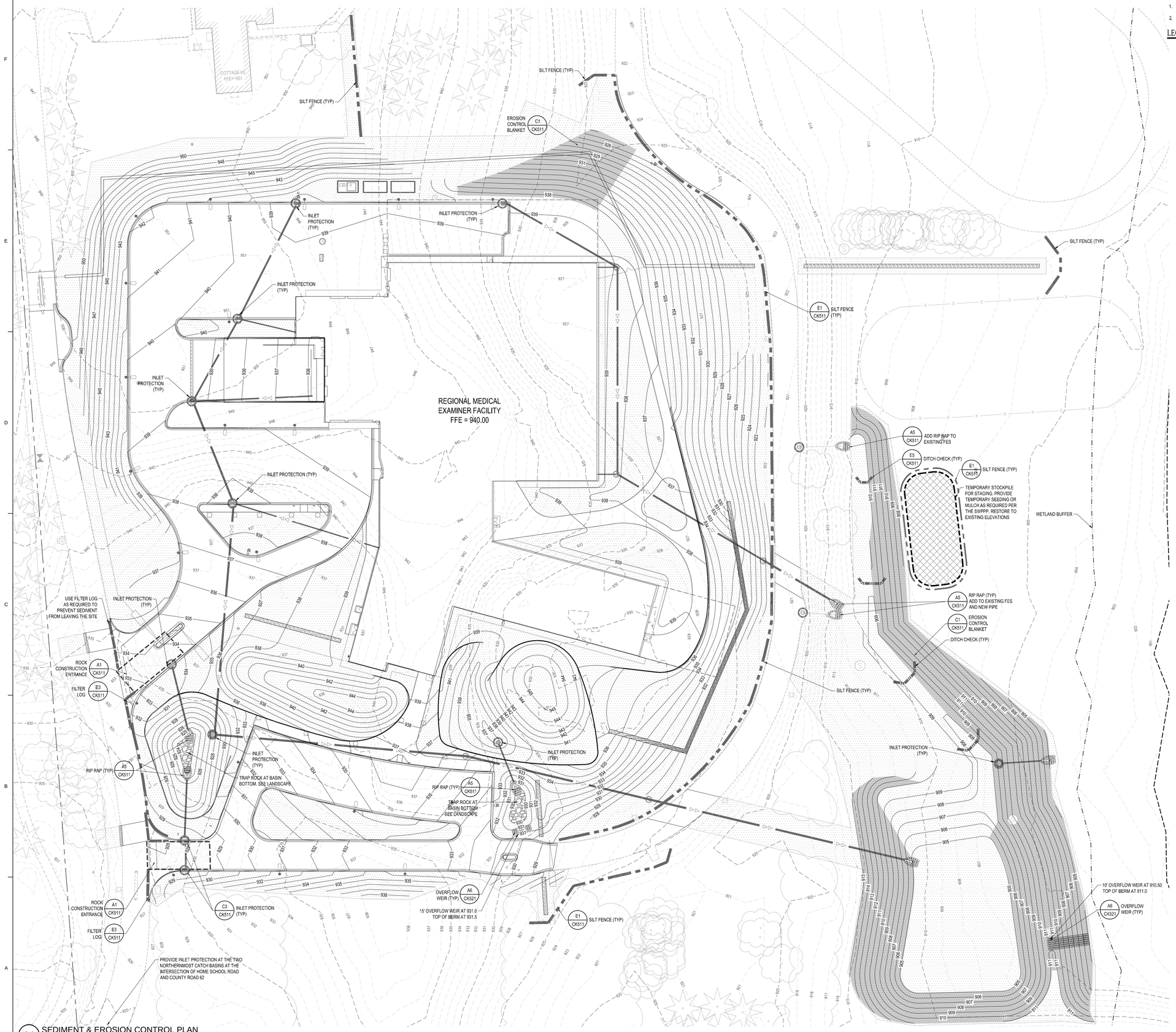

A1 SEDIMENT & EROSION CONTROL PLAN
1" = 30'

EROSION CONTROL NOTES

1. SEE SHEET CG200 FOR SWPPP
2. SEE SHEET CG101 FOR GRADING AND CU101 FOR STORM SEWER INFORMATION.

LEGEND

- SILT FENCE
- FILTER LOG SEDIMENT CONTROL
- DITCH CHECK
- INLET PROTECTION
- ROCK CONSTRUCTION ENTRANCE
- REVEGETATION SEE LANDSCAPE PLAN
- EROSION CONTROL BLANKET (ALL SEEDED SLOPE >3:1 OR AS INDICATED)
- STOCKPILE

SCALE IN FEET: 30 — 90

Know what's below. Call before you dig.

NEW REGIONAL MEDICAL EXAMINER FACILITY
MINNETONKA, MN

HENNEPIN COUNTY
A 2208 GOVERNMENT CENTER
300 SOUTH 6TH STREET
MINNEAPOLIS, MN 55487
COUNTY PROJECT NO. 1002306

LEO A DALY
730 SECOND AVE SOUTH, SUITE 1300,
MINNEAPOLIS, MN 55402-2455
T: 612.338.8741

LABORATORY EQUIPMENT DESIGN
MCCLAREN, WILSON & LAWRIE
11798 N LAKERIDGE PKWY.,
ASHLAND, VA 23005 T: 804-228-7473

CIVIL ENGINEERING
ELAN DESIGN LAB
901 NORTH THIRD STREET, SUITE 120.
MINNEAPOLIS, MN 55401 T: 612-260-7980

LANDSCAPE ARCHITECTURE
DAMON FARBER
401 SECOND AVE NORTH, SUITE 410,
MINNEAPOLIS, MN 55401 T:612-332-7522

TELECOMMUNICATIONS ENGINEERING
TRUE NORTH CONSULTING
140 THIRD STREET SOUTH,
STILLWATER, MN 55082 T:651-705-1231

KEY PLAN

REVISIONS

NO.	DESCRIPTION	DATE

FILE LOG

ACTIVITY	BY
Manager	MJW
Design	SMJ
Draw	LTH
Check	LAD

STAMP

NOT FOR CONSTRUCTION

CITY SUBMITTAL

ELAN Project No. LAD18010
08/15/2019

SEDIMENT & EROSION CONTROL PLAN

CG201

VOLUME 1

CITY SUBMITTAL

Copyright © 2018 LEO A DALY Company

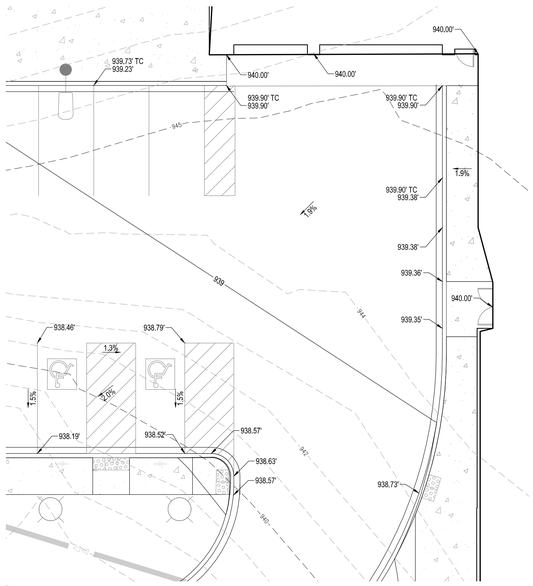

D1 ENLARGED GRADING PLAN
1" = 10'

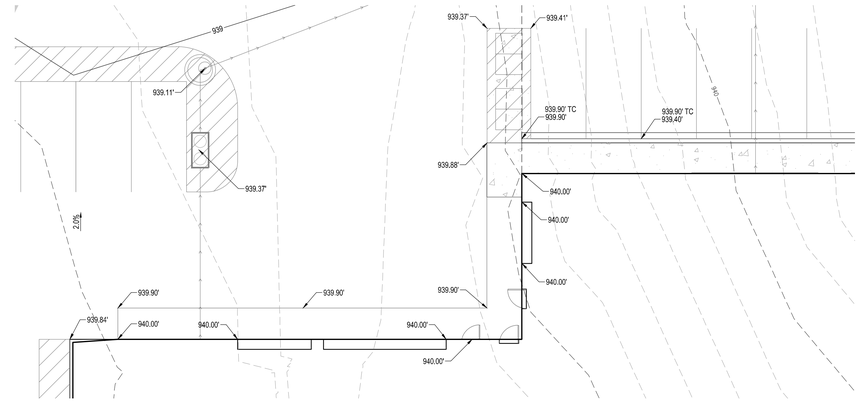

E3 ENLARGED GRADING PLAN
1" = 10'

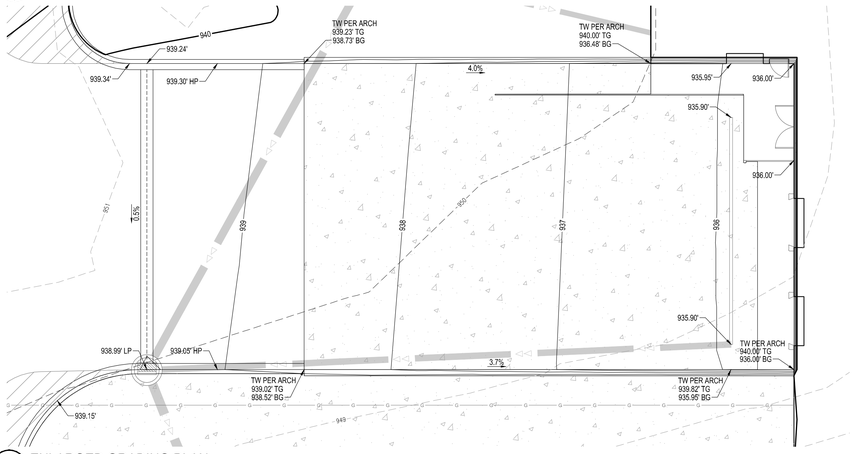

D3 ENLARGED GRADING PLAN
1" = 10'

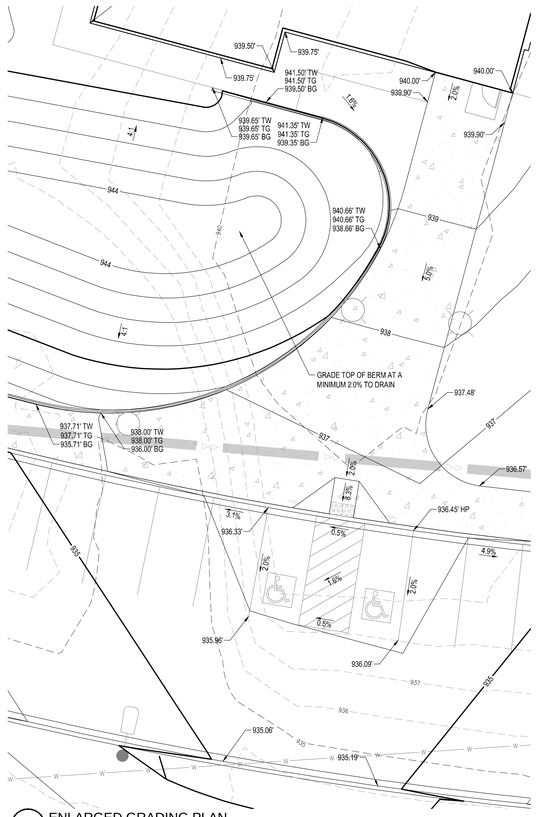

A1 ENLARGED GRADING PLAN
1" = 10'

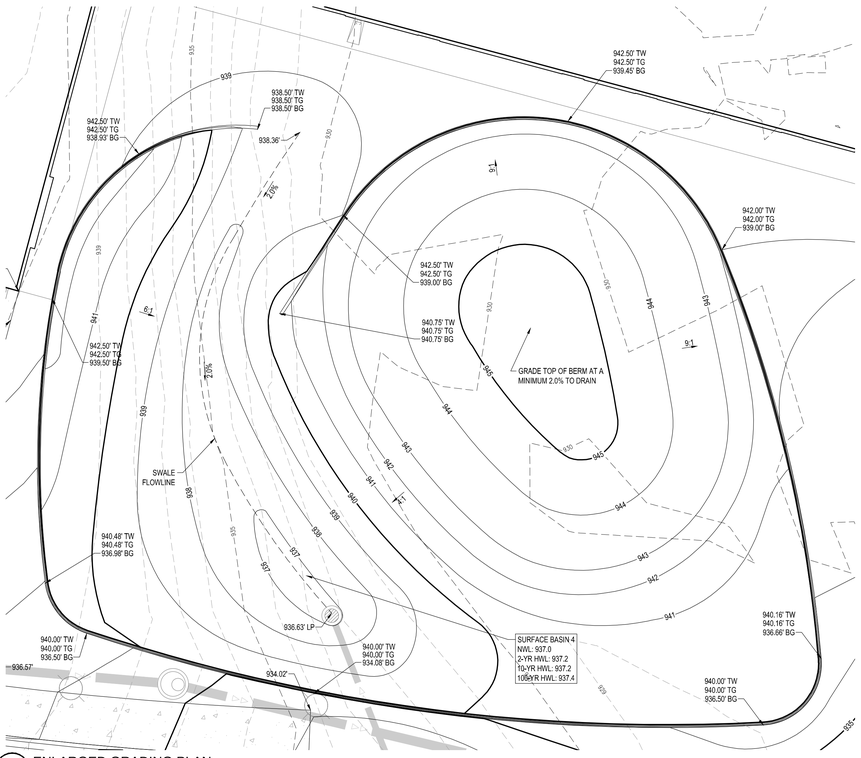

A3 ENLARGED GRADING PLAN
1" = 10'

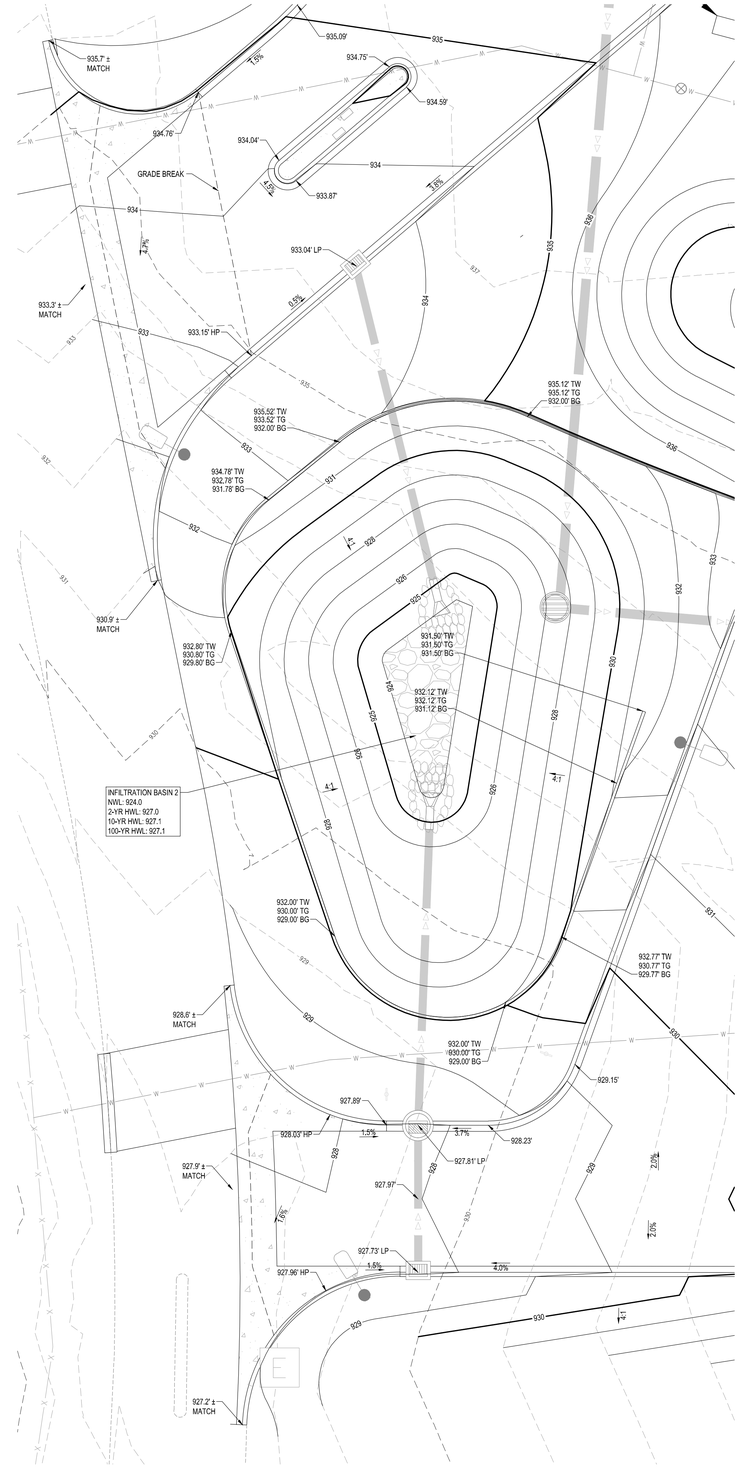

A5 ENLARGED GRADING PLAN
1" = 10'

30 90
SCALE IN FEET

Know what's below. Call before you dig.

NEW REGIONAL MEDICAL EXAMINER FACILITY
MINNETONKA, MN

HENNEPIN COUNTY
A 2208 GOVERNMENT CENTER
300 SOUTH 6TH STREET
MINNEAPOLIS, MN 55487
COUNTY PROJECT NO. 1002306

LEO A DALY
730 SECOND AVE SOUTH, SUITE 1300,
MINNEAPOLIS, MN 55402-2455
T: 612.338.8741

LABORATORY EQUIPMENT DESIGN
MCCLAREN, WILSON & LAWRIE
11798 N LAKERIDGE PKWY,
ASHLAND, VA 23005 T: 804-228-7473

CIVIL ENGINEERING
ELAN DESIGN LAB
901 NORTH THIRD STREET, SUITE 120
MINNEAPOLIS, MN 55401 T: 612-260-7980

LANDSCAPE ARCHITECTURE
DAMON FARBER
401 SECOND AVE NORTH, SUITE 410,
MINNEAPOLIS, MN 55401 T:612-332-7522

TELECOMMUNICATIONS ENGINEERING
TRUE NORTH CONSULTING
140 THIRD STREET SOUTH,
STILLWATER, MN 55082 T:651-705-1231

KEY PLAN

REVISIONS

NO.	DESCRIPTION	DATE

FILE LOG

ACTIVITY	BY
Manager	MJW
Design	SMJ
Draw	LTN
Check	LAD

STAMP

NOT FOR CONSTRUCTION

CITY SUBMITTAL

ELAN Project No. LAD18010
08/15/2019

ENLARGED GRADING PLANS

CG401

VOLUME 1

CITY SUBMITTAL

Copyright © 2018 LEO A DALY Company

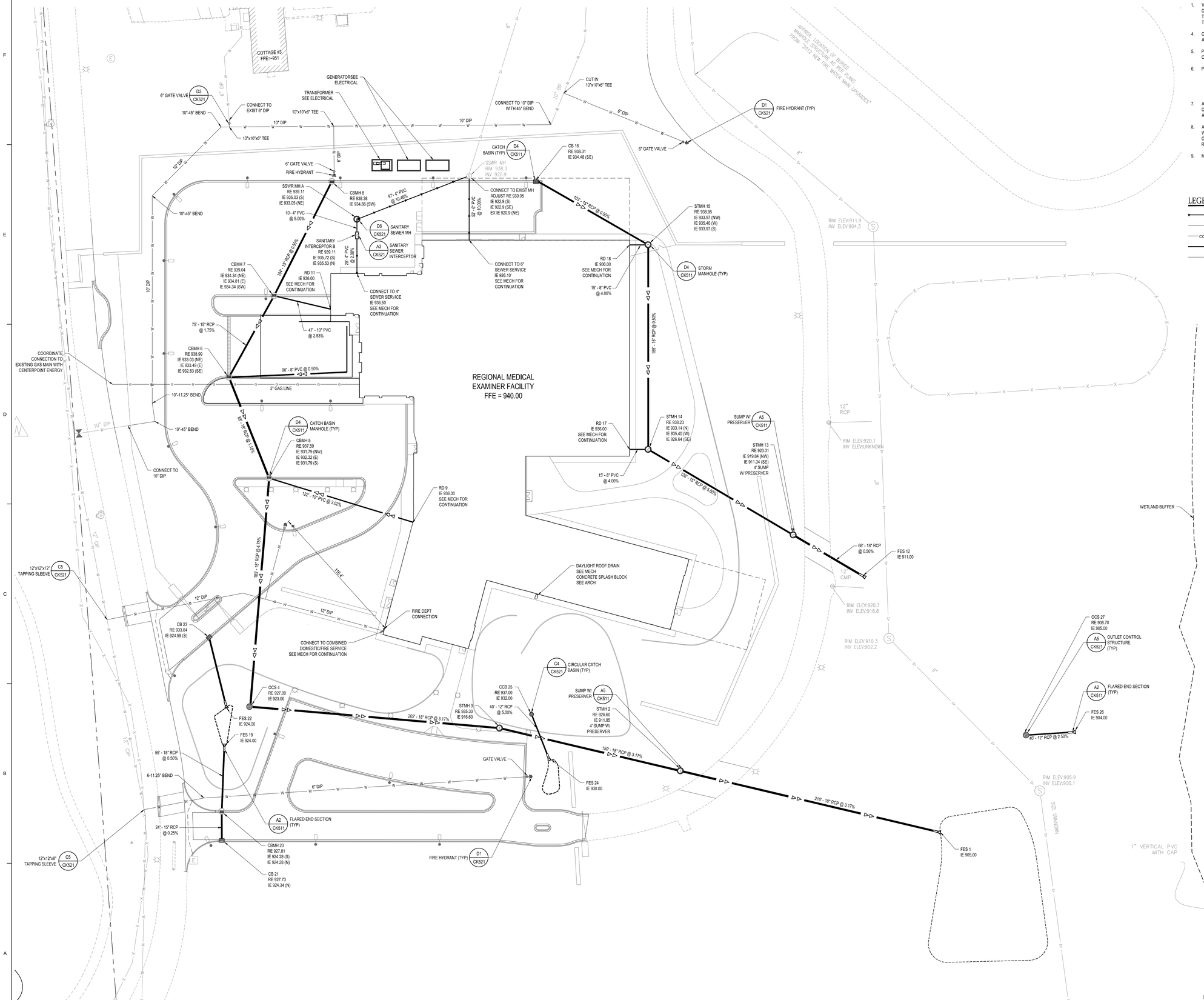

1 OVERALL UTILITY PLAN
1" = 40'

UTILITY NOTES

1. VERIFY ALL CONNECTIONS TO EXISTING UTILITY SERVICES PRIOR TO CONSTRUCTION. ANY DISCREPANCIES BETWEEN LOCATED UTILITIES AND THE EXISTING CONDITIONS PLAN SHOULD BE NOTED AND FORWARDED TO THE ENGINEER.
4. CONTRACTOR TO PROVIDE ADEQUATE MEANS AND METHODS TO ASSURE ADJACENT PROPERTY IS NOT DAMAGED DURING UTILITY INSTALLATION.
5. PIPE LENGTHS SHOWN ARE MEASURED FROM CENTER OF STRUCTURE TO CENTER OF STRUCTURE.
6. PIPE MATERIALS:

WATERMAIN	CLASS 52 DUCTILE IRON PIPE
SAN SEWER	PVC SDR 35
STORM SEWER	RCP, PVC SCHEDULE 40

7. ALL UTILITY CONSTRUCTION TO CONFORM WITH MPCA REQUIREMENTS, CITY ENGINEER'S ASSOCIATION OF MINNESOTA (CEAM) SPECIFICATIONS, AND CITY OF MINNETONKA STANDARD SPECIFICATIONS.
8. ADJUST ALL STRUCTURES, PUBLIC AND PRIVATE, TO PROPOSED GRADES WHERE DISTURBED. COMPLY WITH ALL REQUIREMENTS OF UTILITY OWNERS. STRUCTURES BEING RESET TO PAVED AREAS TO MEET OWNERS REQUIREMENTS FOR TRAFFIC LOADING.
9. MAINTAIN 7.5' COVER ON ALL NEW WATERMAIN.

LEGEND

	SANITARY SEWER
W — W	DOMESTIC WATER SERVICE
COMM — COMM	UNDERGROUND COMMUNICATION
>>	STORM SEWER
G — G	GAS

Know what's below. Call before you dig.

40 120
SCALE IN FEET

NEW REGIONAL MEDICAL EXAMINER FACILITY
MINNETONKA, MN

HENNEPIN COUNTY
A 2208 GOVERNMENT CENTER
300 SOUTH 6TH STREET
MINNEAPOLIS, MN 55487
COUNTY PROJECT NO. 1002306

LEO A DALY
730 SECOND AVE SOUTH, SUITE 1300,
MINNEAPOLIS, MN 55402-2455
T: 612.338.8741

LABORATORY EQUIPMENT DESIGN
MCCLAREN, WILSON & LAWRIE
11798 N LAKERIDGE PKWY.,
ASHLAND, VA 23005 T: 804-228-7473

CIVIL ENGINEERING
ELAN DESIGN LAB
901 NORTH THIRD STREET, SUITE 120.
MINNEAPOLIS, MN 55401 T: 612-260-7980

LANDSCAPE ARCHITECTURE
DAMON FARBER
401 SECOND AVE NORTH, SUITE 410,
MINNEAPOLIS, MN 55401 T:612-332-7522

TELECOMMUNICATIONS ENGINEERING
TRUE NORTH CONSULTING
140 THIRD STREET SOUTH,
STILLWATER, MN 55082 T:651-705-1231

KEY PLAN

REVISIONS

NO.	DESCRIPTION	DATE
	REVISED CITY SUBMITTAL	08/15/2019

FILE LOG

ACTIVITY	BY
Manager	MJW
Design	SMJ
Draw	LTH
Check	LAD

STAMP

NOT FOR CONSTRUCTION

CITY SUBMITTAL

ELAN Project No. LAD18010
08/15/2019

OVERALL UTILITY PLAN

CU101

VOLUME 1

CITY SUBMITTAL

Copyright © 2018 LEO A DALY Company

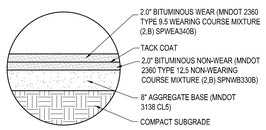

F1 BITUMINOUS PAVEMENT SECTION
NO SCALE

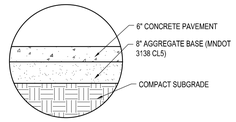

F2 CONCRETE PAVEMENT SECTION
NO SCALE

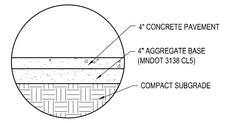

F3 CONCRETE WALKWAY SECTION
NO SCALE

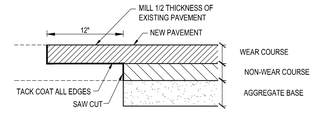

NOTE:
SAW CUT ALL EDGES. REMOVE BITUMINOUS AND ENOUGH AGGREGATE BASE MATERIAL TO ACCOMMODATE NEW PAVEMENT.

F5 BITUMINOUS INTERLOCK AT MATCH LINE
NO SCALE

CONTROL JOINTS SHALL EXTEND TO BOTH THE FRONT AND BACKS OF THE CURB AND BE 2" DEEP AT 10' MAX SPACING.

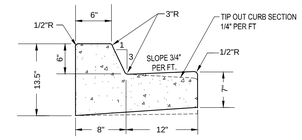

F6 B612 CONCRETE CURB & GUTTER
NO SCALE

CONTROL JOINTS SHALL EXTEND TO BOTH THE FRONT AND BACKS OF THE CURB AND BE 2" DEEP AT 10' MAX SPACING.

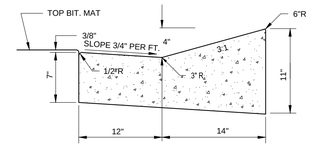

E6 D412 CONCRETE CURB & GUTTER
NO SCALE

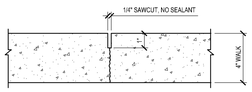

SAWCUT CONTROL JOINT

SPACING: 4', 5', OR 6' WALK - MIN C/C SPACING SHALL EQUAL WIDTH OF WALK
8' WALK - 4' C/C OR 4'X5' PANELS, OR AS DETAILED ON LANDSCAPE PLANS

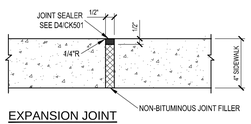

EXPANSION JOINT

MAXIMUM SPACING 100'. ALSO USE WHEN ABUTTING BUILDINGS.

D1 SIDEWALK JOINT
NO SCALE

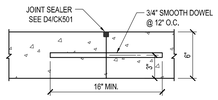

DOWELED CONSTRUCTION JOINT

USE WHERE CONCRETE PLACEMENT OPERATIONS STOP FOR MORE THAN 30 MINUTES, END FOR THE DAY, OR WHERE CAST AGAINST PREVIOUSLY PLACED OR EXISTING CONCRETE.

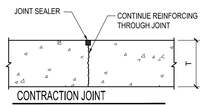

CONTRACTION JOINT

12' MAX. SPACING

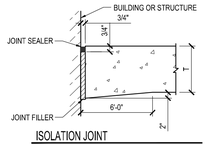

ISOLATION JOINT

USE AGAINST BUILDINGS OR OTHER STRUCTURES

D2 CONCRETE PAVEMENT JOINT
NO SCALE

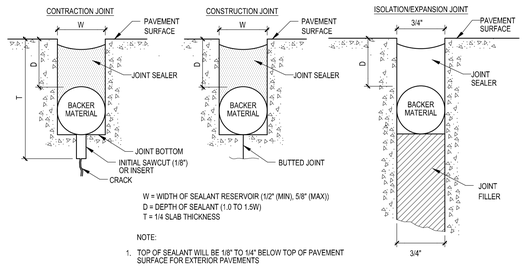

W = WIDTH OF SEALANT RESERVOIR (1/2" (MIN), 5/8" (MAX))
D = DEPTH OF SEALANT (1.0 TO 1.5W)
T = 1/4 SLAB THICKNESS

NOTE:
1. TOP OF SEALANT WILL BE 1/8" TO 1/4" BELOW TOP OF PAVEMENT SURFACE FOR EXTERIOR PAVEMENTS

D4 JOINT SEALER
NO SCALE

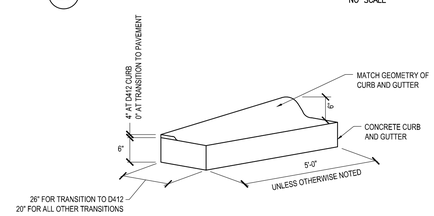

D6 CURB TAPER
NO SCALE

NOTE: REPLACE VARIABLES AND EQUATIONS TO REFLECT ACTUAL CONDITIONS

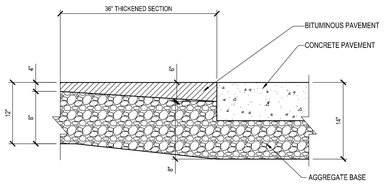

C1 THICKENED EDGE PAVEMENT
NO SCALE

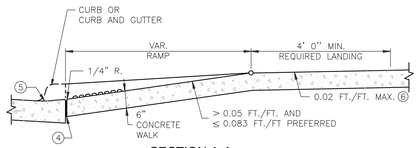

SECTION A-A
PERPENDICULAR/TIERED

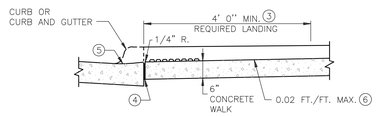

SECTION B-B
PARALLEL

RAMP CROSS SECTIONS

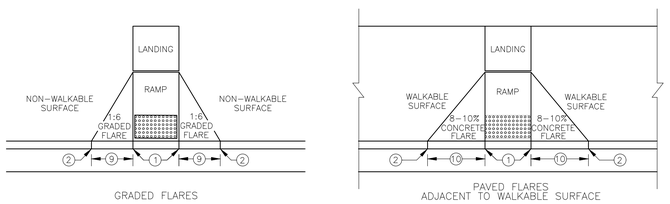

RAMP SIDE TREATMENTS

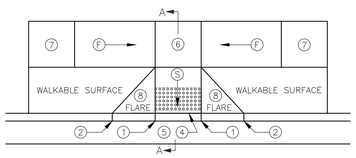

TYPE A - TIERED PERPENDICULAR

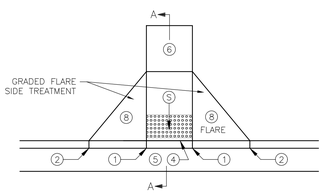

TYPE B - PERPENDICULAR

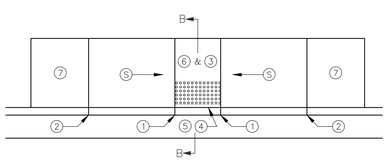

TYPE C - PARALLEL

RAMP TYPES

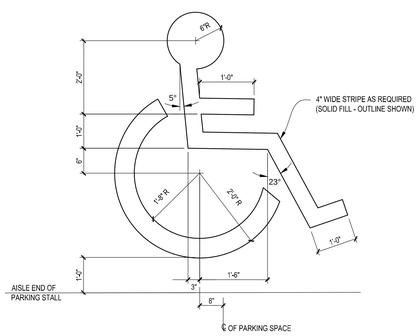

A1 ACCESSIBLE STALL PAVEMENT SYMBOL
NO SCALE

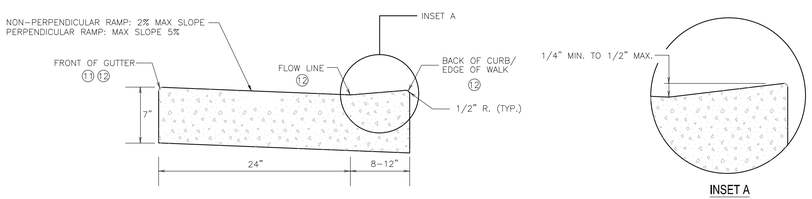

INSET A

PEDESTRIAN ACCESS ROUTE (PAR) AND CURB DETAIL

A2 ACCESSIBLE CURB RAMP
NO SCALE

LEGEND

THESE LONGITUDINAL SLOPE RANGES SHALL BE THE STARTING POINT. IF SITE CONDITIONS WARRANT, LONGITUDINAL SLOPES UP TO 8.3% OR FLATTER ARE ALLOWED.

S — INDICATES PEDESTRIAN RAMP – SLOPE SHALL BE BETWEEN 5.0% MINIMUM AND 8.3% MAXIMUM IN THE DIRECTION SHOWN AND THE CROSS SLOPE SHALL NOT EXCEED 2.0%

F — INDICATES PEDESTRIAN RAMP – SLOPE SHALL BE GREATER THAN 2.0% AND LESS THAN 5.0% IN THE DIRECTION SHOWN AND CROSS SLOPE SHALL NOT EXCEED 2.0%

NOTES

1. LANDINGS SHALL BE LOCATED ANYWHERE THE PEDESTRIAN ACCESS ROUTE CHANGES DIRECTION, AT THE TOP OF RAMPS THAT HAVE RUNNING SLOPES GREATER THAN 5.0%, AND IF THE APPROACHING WALK IS INVERSE GRADE.
2. INITIAL CURB RAMP LANDINGS SHALL BE CONSTRUCTED WITHIN 15' FROM THE BACK OF CURB, WITH 6' FROM THE BACK OF CURB BEING THE PREFERRED DISTANCE.
3. SECONDARY CURB RAMP LANDINGS ARE REQUIRED FOR EVERY 30" OF VERTICAL RISE WHEN THE LONGITUDINAL SLOPE IS GREATER THAN 5.0%.
4. CONTRACTION JOINTS SHALL BE CONSTRUCTED ALONG ALL GRADE BREAKS.
5. ALL GRADE BREAKS WITHIN THE PAR SHALL BE PERPENDICULAR TO THE PATH OF TRAVEL.
6. TO ENSURE RAMPS AND LANDINGS ARE PROPERLY CONSTRUCTED, LANDINGS MAY BE CAST SEPARATELY.
7. FOLLOW SIDEWALK REINFORCEMENT DETAILS ON SHEET 5 WHEN LANDINGS ARE CAST SEPARATELY. ALL SLOPES ARE ABSOLUTE, RATHER THAN RELATIVE TO SIDEWALK/ROADWAY GRADES.
8. TOP OF CURB SHALL MATCH PROPOSED ADJACENT WALK GRADE. 4' MINIMUM WIDTH OF DETECTABLE WARNING IS REQUIRED FOR ALL RAMPS.
9. DETECTABLE WARNINGS SHALL CONTINUOUSLY EXTEND FOR A MINIMUM OF 24" IN THE PATH OF TRAVEL.
10. SHARED USE PATHS SHALL HAVE DETECTABLE WARNING ACROSS THE ENTIRE WIDTH OF PATH WHEN THE PATH CROSSES A ROAD.
11. SEE MnDOT STANDARD PLATE 7038 FOR ADDITIONAL DETAILS ON DETECTABLE WARNING.
12. SIDE TREATMENTS ARE APPLICABLE TO ALL RAMP TYPES AND SHOULD BE IMPLEMENTED AS NEEDED ON ALL RAMPS AS FIELD CONDITIONS DICTATE. THE ENGINEER SHALL DETERMINE THE RAMP SIDE TREATMENTS BASED ON MAINTENANCE OF BOTH ROADWAY AND SIDEWALK, ADJACENT PROPERTY CONSIDERATIONS, AND MITIGATING CONSTRUCTION IMPACTS.
13. POSITIVE FLOW LINE DRAINAGE SHALL BE MAINTAINED THROUGH THE PEDESTRIAN ACCESS ROUTE (PAR) AT A 2% MAXIMUM.
14. NO PONDING SHALL BE PRESENT IN THE PAR.
15. ANY VERTICAL LIP THAT OCCURS AT THE FLOW LINE SHALL NOT BE GREATER THAN 1/4 INCH.
16. WHEN NO CONCRETE FLARES ARE PROPOSED, THE CONCRETE WALK SHALL BE FORMED AND CONSTRUCTED PERPENDICULAR TO THE EDGE OF ROADWAY. MAINTAIN 3" BETWEEN EDGE OF DOMES AND EDGE OF CONCRETE.

KEYNOTES

1. 0" CURB HEIGHT.
2. FULL CURB HEIGHT.
3. DETECTABLE WARNINGS MAY BE PART OF 4' X 4' LANDING AREA IF IT IS NOT FEASIBLE TO CONSTRUCT THE LANDING OUTSIDE OF THE DETECTABLE WARNING AREA.
4. 1/2" PREFORMED JOINT FILLER MATERIAL AASHTO M 213. JOINT FILLER SHALL BE PLACED FLUSH WITH THE BACK OF CURB AND ADJACENT SIDEWALK. JOINT SHALL BE FREE OF DEBRIS. RECTANGULAR DETECTABLE WARNINGS SHALL BE SETBACK 3" FROM THE BACK OF CURB. RADIAL DETECTABLE WARNINGS SHALL BE SETBACK 3" MINIMUM TO 6" MAXIMUM FROM THE BACK OF CURB.
5. SEE PEDESTRIAN ACCESS ROUTE CURB AND GUTTER DETAIL FOR INFORMATION ON CONSTRUCTING CURB AND GUTTER AT CURB OPENINGS.
6. 4' BY 4' MIN. LANDING WITH MAX. 2.0% SLOPE IN ALL DIRECTIONS. IF LONGITUDINAL SLOPE IS GREATER THAN 5.0%, 4' X 4' MIN.
7. LANDING WITH MAX 2.0% SLOPE IN ALL DIRECTIONS REQUIRED.
8. SEE SIDE TREATMENT OPTIONS, FOR DETAILS ON FLARES AND RETURNED CURBS.
9. 3' FLARE, UNLESS OTHERWISE NOTED.
10. 6' FLARE, UNLESS OTHERWISE NOTED.
11. THERE SHALL BE NO VERTICAL DISCONTINUITIES GREATER THAN 1/4".
12. TOP FRONT OF GUTTER SHALL BE CONSTRUCTED FLUSH WITH PROPOSED ADJACENT PAVEMENT ELEVATION. PAR GUTTER SHALL NOT BE OVERLAID.
13. MAX. 2.0% SLOPE IN ALL DIRECTIONS IN FRONT OF GRADE BREAK AND DRAIN TO FLOW LINE. SHALL BE CONSTRUCTED INTEGRAL WITH CURB AND GUTTER.
14. PLACE DOMES AT THE BACK OF CURB WHEN ALLOWABLE SETBACK CRITERIA IS EXCEEDED.

NO SCALE

NEW REGIONAL MEDICAL EXAMINER FACILITY
MINNETONKA, MN

HENNEPIN COUNTY
A 2208 GOVERNMENT CENTER
300 SOUTH 6TH STREET
MINNEAPOLIS, MN 55487
COUNTY PROJECT NO. 1002306

LEO A DALY
730 SECOND AVE SOUTH, SUITE 1300,
MINNEAPOLIS, MN 55402-2455
T: 612.338.8741

LABORATORY EQUIPMENT DESIGN
MCCLAREN, WILSON & LAWRIE
11798 N LAKERIDGE PKWY.,
ASHLAND, VA 23005 T: 804-228-7473

CIVIL ENGINEERING
ELAN DESIGN LAB
901 NORTH THIRD STREET, SUITE 120.
MINNEAPOLIS, MN 55401 T: 612-260-7980

LANDSCAPE ARCHITECTURE
DAMON FARBER
401 SECOND AVE NORTH, SUITE 410,
MINNEAPOLIS, MN 55401 T:612-332-7522

TELECOMMUNICATIONS ENGINEERING
TRUE NORTH CONSULTING
140 THIRD STREET SOUTH,
STILLWATER, MN 55082 T:651-705-1231

KEY PLAN

REVISIONS

NO.	DESCRIPTION	DATE

FILE LOG

ACTIVITY	BY
Manager	MJV
Design	SMJ
Draw	LTH
Check	LAD

STAMP

NOT FOR CONSTRUCTION

CITY SUBMITTAL

ELAN Project No. LAD18010
08/15/2019

SITE DETAILS

CK501

VOLUME 1

CITY SUBMITTAL

Copyright © 2018 LEO A DALY Company

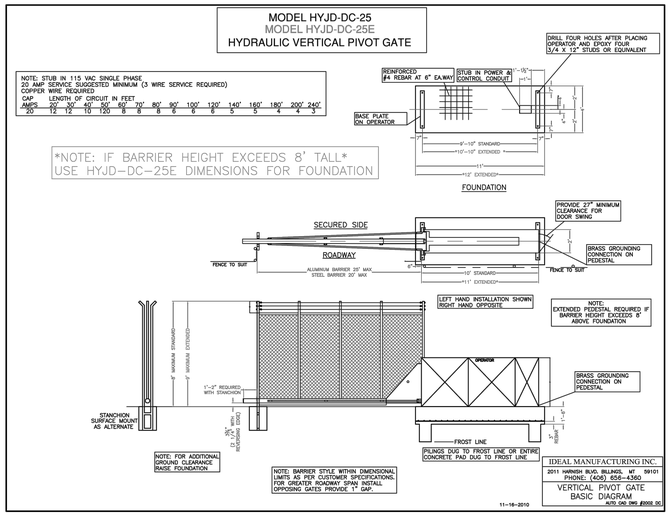

E1 VERTICAL PIVOT GATE

NO SCALE

OMEGA ECO PANELS MOUNTED ON SQUARE POSTS (HEIGHT 8' H)

REVISION 01

Panneaux Omega ECO sur poteaux carrés (grandeur 8' H)

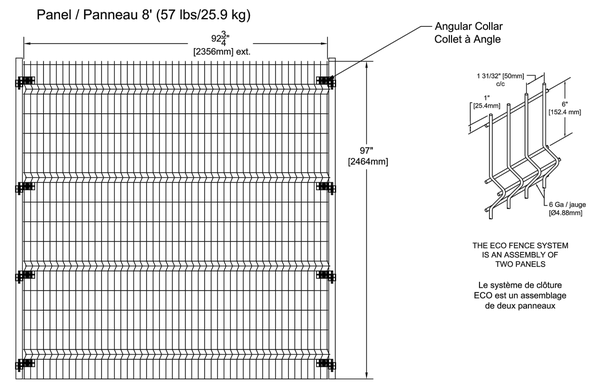

SYSTÈMES DE CLÔTURES omega II FENCE SYSTEMS

Système de Clôtures Omega II
1735 boul. St-Elzéar Ouest
Laval, Quebec
H7L 3N6

Tel: 450-686-9600
1-800-836-6342
Fax: 450-681-5318
www.omegadeux.com

E3 ECO SECURITY FENCE

NO SCALE

OMEGA ARCHITECTURAL PANELS MOUNTED ON SQUARE POSTS (HEIGHT 8' H)

REVISION 01

Panneaux Omega Architecturale sur poteaux carrés (grandeur 8' H)

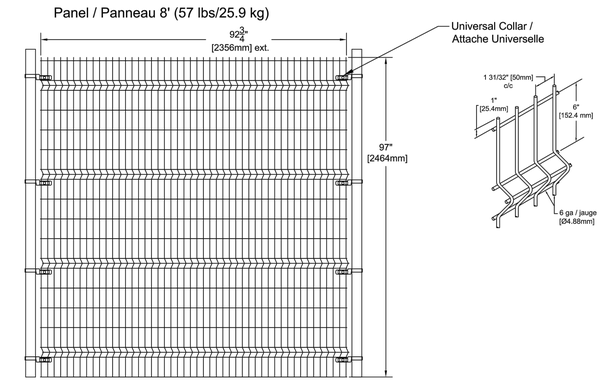

SYSTÈMES DE CLÔTURES omega II FENCE SYSTEMS

Système de Clôtures Omega II
1735 boul. St-Elzéar Ouest
Laval, Quebec
H7L 3N6

Tel: 450-686-9600
1-800-836-6342
Fax: 450-681-5318
www.omegadeux.com

E5 SECURITY FENCE

NO SCALE

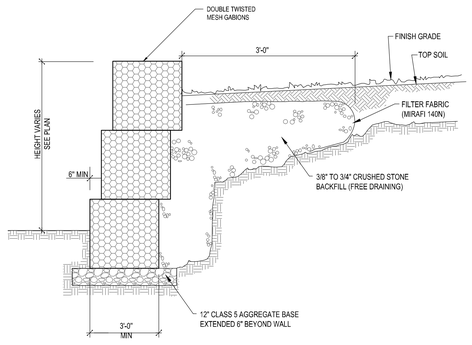

NOTES:
1. FINAL DESIGN OF WALL TO BE SUBMITTED BY CONTRACTOR AND SIGNED BY A LICENSED STRUCTURAL ENGINEER.

C1 GABION RETAINING WALL

NO SCALE

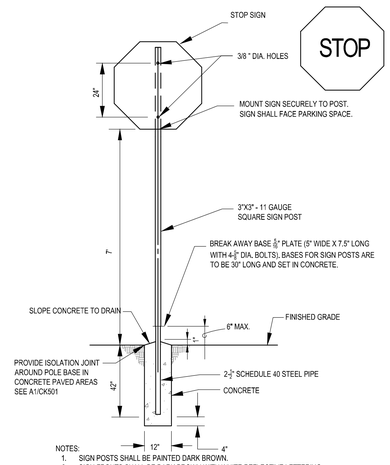

NOTES:
1. SIGN POSTS SHALL BE PAINTED DARK BROWN.
2. SIGN FRONTS SHALL BE DARK BROWN WITH WHITE REFLECTIVE LETTERING.
3. BACK OF SIGN SHALL BE DARK BRONZE.

C3 STOP SIGN

NO SCALE

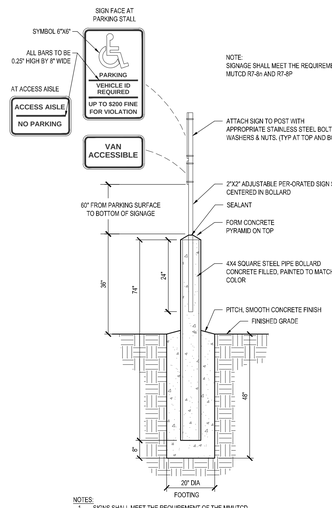

NOTES:
1. SIGNS SHALL MEET THE REQUIREMENT OF THE MMUTCD

C4 ACCESSIBILITY SIGNAGE

NO SCALE

OMEGA ARCHITECTURAL SINGLE SWING GATE MODEL GPM20

REVISION 01

Barrière Omega Architecturale à battant simple modèle GPM20

GATE POST DIMENSIONS		
PANEL (H)	OPENING	POST
4', 5' & 6'	3' to 8'	3" x 3" 11 ga
8'	3' to 7'	3" x 3" 11 ga
4'	9' to 16'	4" x 4" 11 ga
5'	9' to 13'	4" x 4" 11 ga
6'	9' to 12'	4" x 4" 11 ga
8'	8' to 9'	4" x 4" 11 ga
5'	14' to 16'	6" x 6" 3/16"
6'	13' to 30'	6" x 6" 3/16"
8'	10' to 26'	6" x 6" 3/16"

Grandeur des poteaux de porte		
Panneau (H)	Ouverture	Poteau
4', 5' & 6'	3' à 8'	3" x 3" 11 ga
8'	3' à 7'	3" x 3" 11 ga
4'	9' à 16'	4" x 4" 11 ga
5'	9' à 13'	4" x 4" 11 ga
6'	9' à 12'	4" x 4" 11 ga
8'	8' & 9'	4" x 4" 11 ga
5'	14' à 16'	6" x 6" 3/16"
6'	13' à 30'	6" x 6" 3/16"
8'	10' à 26'	6" x 6" 3/16"

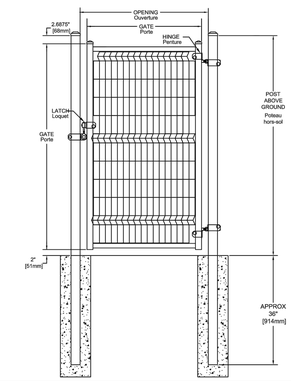

SYSTÈMES DE CLÔTURES omega II FENCE SYSTEMS

Omega II Fence Systems
1735 blvd. St-Elzéar West
Laval, Quebec
H7L 3N6

Tel: 450-686-9600
1-800-836-6342
Fax: 450-681-5318
www.omegatwo.com

C5 SECURITY FENCE GATE

NO SCALE

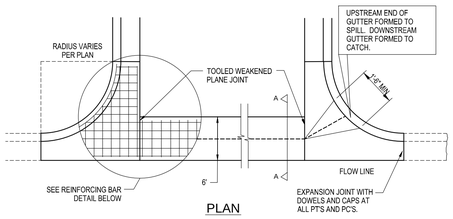

PLAN

NOTES:
1. #4 BARS PLACED ON CHAIRS AT MIDDEPTH OF SLAB TO BE CONTINUOUS ACROSS JOINTS EXCEPT EXPANSION JOINTS.
2. ADDITIONAL WEAKENED PLANE JOINT REQUIRED AT MIDPOINT FOR BACK TO BACK WIDTHS GREATER THAN 50 FEET.
3. GUTTER CONCRETE SHALL BE INTEGRAL WITH CURB UNLESS OTHERWISE SPECIFIED.
4. A MINIMUM 0.50% GRADE SHALL BE MAINTAINED ACROSS THE ENTIRE FLOWLINE OF THE GUTTER.

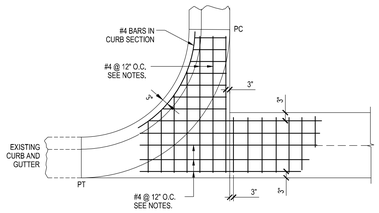

REINFORCING BAR DETAIL

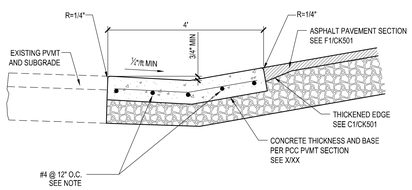

SECTION A-A

A1 CONCRETE CROSS GUTTER

NO SCALE

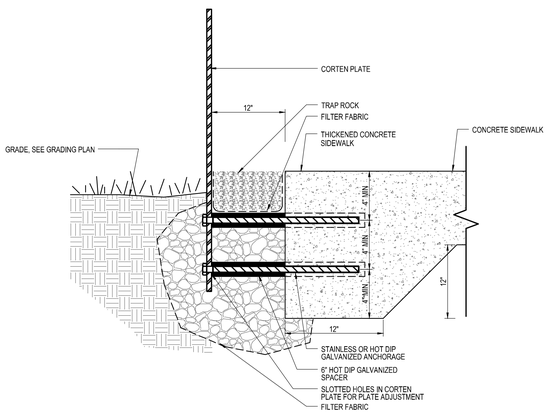

NOTES:
1. FINAL DESIGN OF CONCRETE BASE TO BE SUBMITTED BY CONTRACTOR AND SIGNED BY A LICENSED STRUCTURAL ENGINEER.

A4 CORE-TEN PANEL AT SIDEWALK

NO SCALE

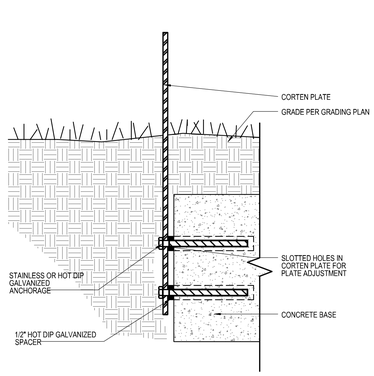

NOTES:
1. FINAL DESIGN OF CONCRETE BASE TO BE SUBMITTED BY CONTRACTOR AND SIGNED BY A LICENSED STRUCTURAL ENGINEER.

A5 CORE-TEN PANEL IN GREENSPACE

NO SCALE

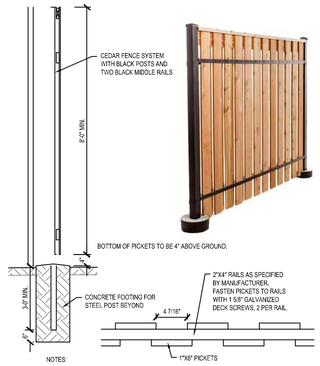

NOTES:
1. FENCE TO BE VERTICAL CEDAR FENCE COMMERCIAL FENCE BY SLIPFENCE OR APPROVED EQUAL.
2. INSTALL ON STEEL RAILS AND POSTS OR AS DIRECTED BY MANUFACTURER, COMMERCIAL USE SYSTEM WITH CONCRETE SET POSTS.
3. MATERIALS AND POST SPACING TO BE PER MANUFACTURER STANDARDS. FIELD VERIFY ALL DIMENSIONS.
4. POSTS TO BE SPACED 8' MAXIMUM.

A6 PRIVACY FENCE

NO SCALE

NEW REGIONAL MEDICAL EXAMINER FACILITY
MINNETONKA, MN

HENNEPIN COUNTY
A 2208 GOVERNMENT CENTER
300 SOUTH 6TH STREET
MINNEAPOLIS, MN 55487
COUNTY PROJECT NO. 1002306

LEO A DALY
730 SECOND AVE SOUTH, SUITE 1300,
MINNEAPOLIS, MN 55402-2455
T: 612.338.8741

LABORATORY EQUIPMENT DESIGN
MCCLAREN, WILSON & LAWRIE
11798 N LAKERIDGE PKWY.,
ASHLAND, VA 23005 T: 804-228-7473

CIVIL ENGINEERING
ELAN DESIGN LAB
901 NORTH THIRD STREET, SUITE 120.
MINNEAPOLIS, MN 55401 T: 612-260-7980

LANDSCAPE ARCHITECTURE
DAMON FARBER
401 SECOND AVE NORTH, SUITE 410,
MINNEAPOLIS, MN 55401 T:612-332-7522

TELECOMMUNICATIONS ENGINEERING
TRUE NORTH CONSULTING
140 THIRD STREET SOUTH,
STILLWATER, MN 55082 T:651-705-1231

KEY PLAN

REVISIONS

NO	DESCRIPTION	DATE

FILE LOG

ACTIVITY	BY
Manager	MJW
Design	SMJ
Draw	LTH
Check	LAD
STAMP	

NOT FOR CONSTRUCTION

CITY SUBMITTAL

ELAN Project No. LAD18010
08/15/2019

SITE DETAILS

CK502

VOLUME 1

CITY SUBMITTAL

Copyright © 2018 LEO A DALY Company

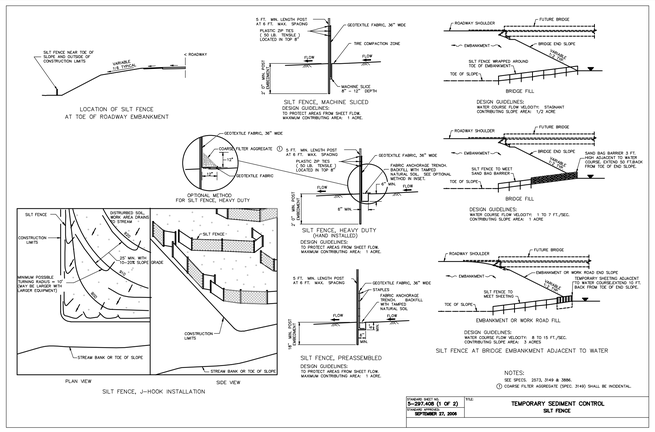

E1 SILT FENCE

NO SCALE

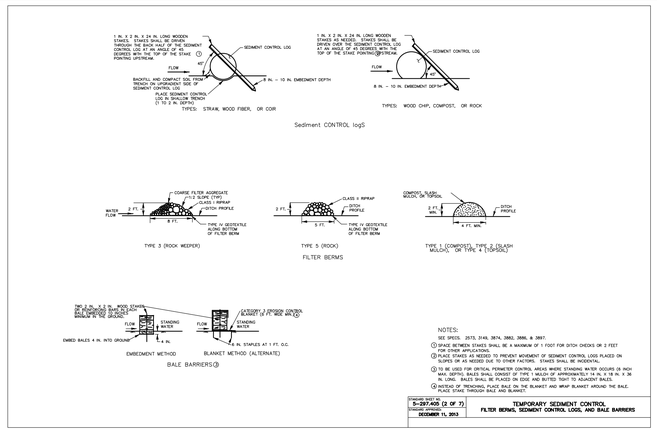

E3 FILTER LOG

NO SCALE

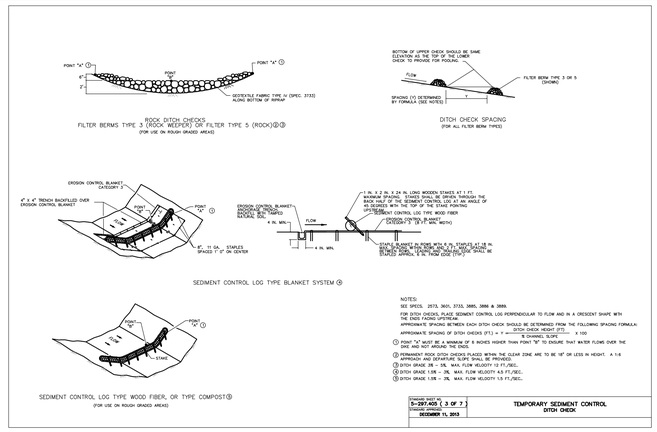

E5 DITCH CHECK

NO SCALE

1. APPLY LIME, FERTILIZER AND SEED BEFORE LAYING THE NET OR MAT.
2. START LAYING THE NET FROM THE TOP OF THE CHANNEL OR SLOPE AND UNROLL IT DOWN THE GRADE. ALLOW NETTING TO LAY LOOSELY ON THE SOIL BUT WITHOUT WRINKLES - DO NOT STRETCH. MAT OR BLANKET - TYPE PRODUCT SHOULD PROVIDE AT LEAST 30% COVERAGE OF THE SURFACE WHERE IT IS APPLIED.
3. TO SECURE THE NET, BURY THE UPSLOPE END IN A SLOT OR TRENCH NO LESS THAN 6 INCHES DEEP, COVER WITH SOIL, AND TAMP FIRMLY AS SHOWN. STAPLE THE NET EVERY 12 INCHES ACROSS THE TOP END AND EVERY 3 FOOT AROUND THE EDGES AND BOTTOM. WHERE 2 STRIPS OF NET ARE LAID SIDE BY SIDE, THE ADJACENT EDGES SHOULD BE OVERLAPPED 3 INCHES AND STAPLED TOGETHER. EACH STRIP OF NETTING SHOULD ALSO BE STAPLED DOWN THE CENTER, EVERY 3 FOOT. DO NOT STRETCH THE NET WHEN APPLYING STAPLES.
4. TO JOIN TWO STRIPS, CUT A TRENCH AND ANCHOR THE END OF THE NEW NET. OVERLAP THE END OF THE PREVIOUS ROLL 18 INCHES, AS SHOWN, AND STAPLE EVERY 12 INCHES JUST BELOW THE ANCHOR SLOT

MAINTENANCE: INSPECT ALL MULCHES PERIODICALLY, AFTER RAINSTORMS TO CHECK FOR RILL EROSION, DISLOCATION, OR FAILURE. WHEN EROSION IS OBSERVED, APPLY ADDITIONAL MULCH. IF WASHOUT OCCURS, REPAIR THE SLOPE GRADE, RESEED, AND REINSTALL MULCH. CONTINUE INSPECTIONS UNTIL VEGETATION IS FIRMLY ESTABLISHED.

NOTE: USE MAT WITH NATURAL REINFORCEMENT THAT WILL BIODEGRADE WITHIN 1 GROWING SEASON TO PREVENT BLANDING TURTLE ENTANGLEMENT.

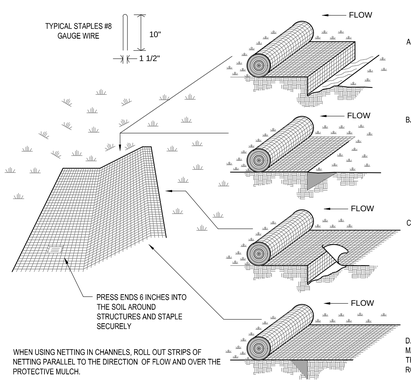

C1 EROSION CONTROL BLANKET

NO SCALE

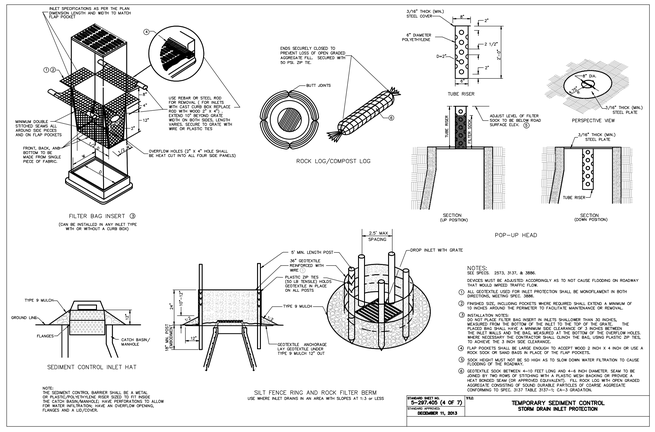

C3 INLET PROTECTION

NO SCALE

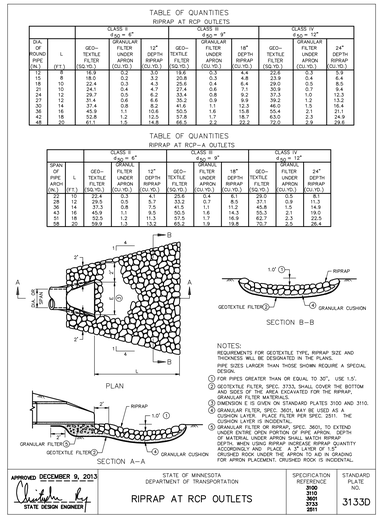

A5 RIP RAP

NO SCALE

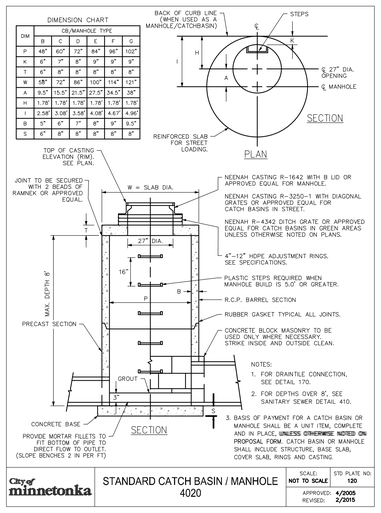

D4 CATCH BASIN / STORM MANHOLE (STMH/CBMH)

NO SCALE

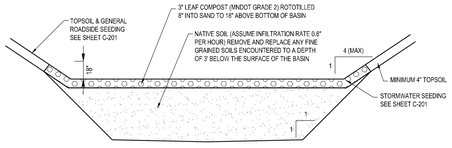

B1 INFILTRATION CONSTRUCTION

NO SCALE

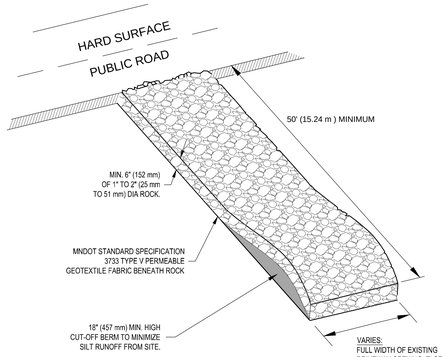

A1 ROCK CONSTRUCTION ENTRANCE

NO SCALE

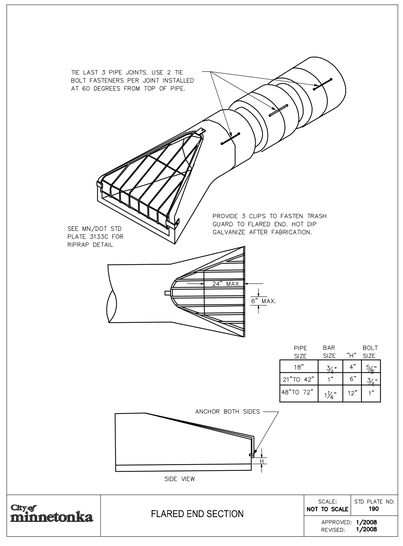

PIPE SIZE	BAR SIZE "H"		BOLT SIZE "H"	
18"	3/4"	4"	5/8"	
21"TO 42"	1"	6"	3/4"	
48"TO 72"	1 1/8"	12"	1"	

A2 FLARED END SECTION

NO SCALE

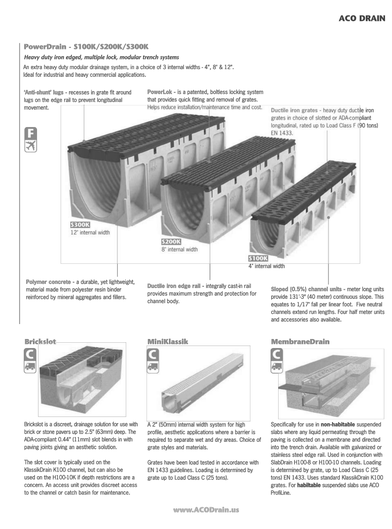

A4 S100K TRENCH DRAIN (TD)

NO SCALE

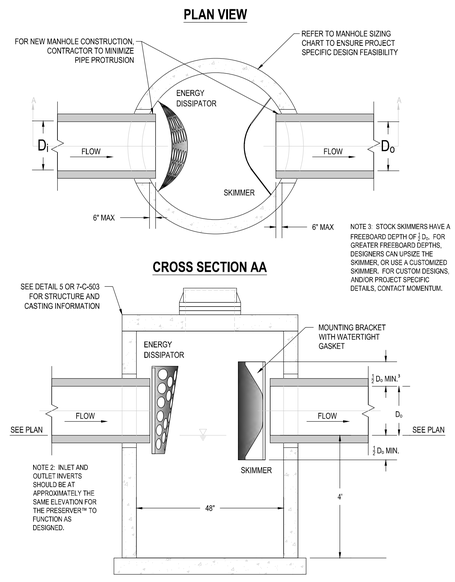

A5 SUMP W/ PRESERVER

NO SCALE

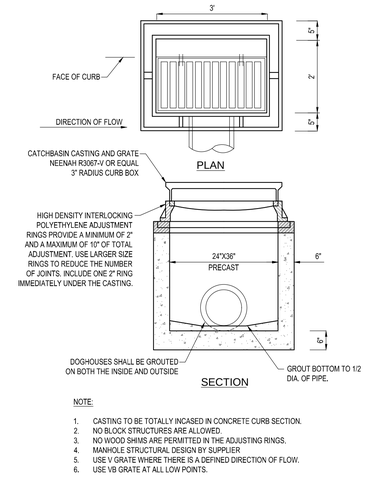

A6 CATCH BASIN

NO SCALE

NEW REGIONAL MEDICAL EXAMINER FACILITY
MINNETONKA, MN

HENNEPIN COUNTY
A 2208 GOVERNMENT CENTER
300 SOUTH 6TH STREET
MINNEAPOLIS, MN 55487
COUNTY PROJECT NO. 1002306

LEO A DALY
730 SECOND AVE SOUTH, SUITE 1300,
MINNEAPOLIS, MN 55402-2455
T: 612.338.8741

LABORATORY EQUIPMENT DESIGN
MCCLAREN, WILSON & LAWRIE
11798 N LAKERIDGE PKWY.,
ASHLAND, VA 23005 T: 804-228-7473

CIVIL ENGINEERING
ELAN DESIGN LAB
901 NORTH THIRD STREET, SUITE 120.
MINNEAPOLIS, MN 55401 T: 612-260-7980

LANDSCAPE ARCHITECTURE
DAMON FARBER
401 SECOND AVE NORTH, SUITE 410,
MINNEAPOLIS, MN 55401 T:612-332-7522

TELECOMMUNICATIONS ENGINEERING
TRUE NORTH CONSULTING
140 THIRD STREET SOUTH,
STILLWATER, MN 55082 T:651-705-1231

KEY PLAN

REVISIONS

NO.	DESCRIPTION	DATE

FILE LOG

ACTIVITY	BY
Manager	MJW
Design	SMJ
Draw	LTH
Check	LAD

STAMP

NOT FOR CONSTRUCTION

CITY SUBMITTAL

ELAN Project No. LAD18010
08/15/2019

EROSION CONTROL & STORM SEWER DETAILS

CK511

VOLUME 1

CITY SUBMITTAL

Copyright © 2018 LEO A DALY Company

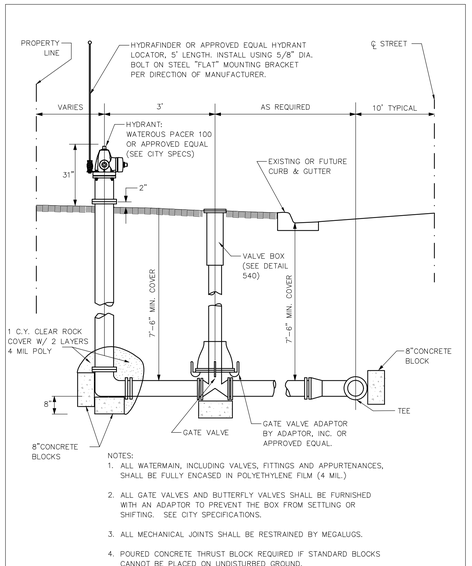

NOTES:

1. ALL WATERMAIN, INCLUDING VALVES, FITTINGS AND APPURTENANCES, SHALL BE FULLY ENCASED IN POLYETHYLENE FILM (4 MIL.)
2. ALL GATE VALVES AND BUTTERFLY VALVES SHALL BE FURNISHED WITH AN ADAPTOR TO PREVENT THE BOX FROM SETTLING OR SHIFTING. SEE CITY SPECIFICATIONS.
3. ALL MECHANICAL JOINTS SHALL BE RESTRAINED BY MEGALUGS.
4. POURED CONCRETE THRUST BLOCK REQUIRED IF STANDARD BLOCKS CANNOT BE PLACED ON UNDISTURBED GROUND.

City of minnetonka | HYDRANT | SCALE: NOT TO SCALE | STD PLATE NO: 500 | APPROVED: 5/2000 | REVISED: 2/2015

D1 HYDRANT NO SCALE

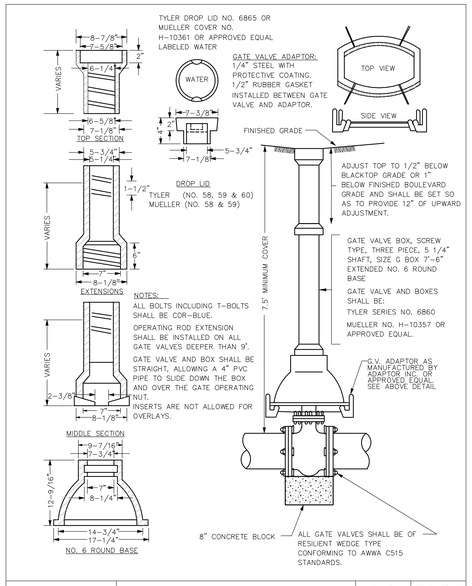

NOTES:

ALL BOLTS INCLUDING T-BOLTS SHALL BE COR-BLUE.

OPERATING ROD EXTENSION SHALL BE INSTALLED ON ALL GATE VALVES DEEPER THAN 9'.

GATE VALVE AND BOX SHALL BE STRAIGHT, ALLOWING A 4" PVC PIPE TO SLIDE DOWN THE BOX AND OVER THE GATE OPERATING NUT.

INSERTS ARE NOT ALLOWED FOR OVERLAYS.

City of minnetonka | GATE VALVE | SCALE: NOT TO SCALE | STD PLATE NO: 540 | APPROVED: 1/2008 | REVISED: 1/2008

D3 GATE VALVE NO SCALE

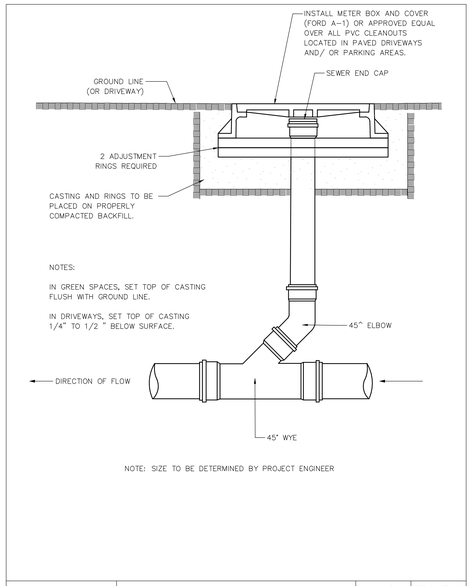

NOTES:

IN GREEN SPACES, SET TOP OF CASTING FLUSH WITH GROUND LINE.

IN DRIVEWAYS, SET TOP OF CASTING 1/4" TO 1/2" BELOW SURFACE.

NOTE: SIZE TO BE DETERMINED BY PROJECT ENGINEER

City of minnetonka | SANITARY SEWER SERVICE CLEANOUT | SCALE: NOT TO SCALE | STD PLATE NO: 400 | APPROVED: 5/2000 | REVISED:

D4 SANITARY SEWER SERVICE CLEANOUT NO SCALE

DIMENSION CHART

DIM	MANHOLE TYPE					
	B	C	D	E	F	G
P	48"	60"	72"	84"	96"	102"
B	5"	6"	7"	8"	9"	9.5"
S	6"	8"	8"	8"	8"	12"
C	60"	72"	84"	96"	108"	114"

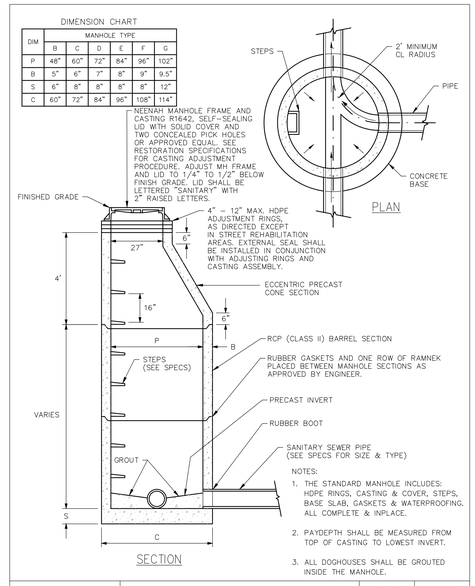

NOTES:

1. THE STANDARD MANHOLE INCLUDES: HDPE RINGS, CASTING & COVER, STEPS, BASE SLAB, GASKETS & WATERPROOFING. ALL COMPLETE & INPLACE.
2. PAYDEPTH SHALL BE MEASURED FROM TOP OF CASTING TO LOWEST INVERT.
3. ALL DOGHOUSES SHALL BE GROUTED INSIDE THE MANHOLE.

City of minnetonka | SANITARY SEWER MANHOLE | SCALE: NOT TO SCALE | STD PLATE NO: 410 | APPROVED: 4/2000 | REVISED: 3/2015

D6 SANITARY SEWER MANHOLE NO SCALE

GENERAL NOTES:

WHERE TRENCH BOTTOM IS UNSTABLE, THE CONTRACTOR SHALL EXCAVATE TO A DEPTH REQUIRED BY THE ENGINEER AND REPLACE WITH A FOUNDATION OF CLASS I OR III MATERIAL AS DEFINED IN ASTM D2321, LATEST EDITION

HAUNCHING AND INITIAL BACKFILL SHALL BE CLASS I, II OR III AND INSTALLED AS REQUIRED IN ASTM D2321, LATEST EDITION.

MINIMUM COVER = 12" TO FINISH GRADE SURFACE
MOUND AND COMPACT TO 48" COVER DURING CONSTRUCTION

D	W
4"	21"
6"	23"
8"	26"
10"	28"
12"	31"
15"	34"
18"	39"
24"	48"

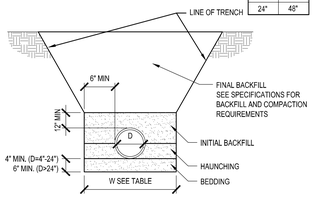

C1 PVC/HDPE PIPE BEDDING NO SCALE

TRENCH SHALL BE BRACED, SHEETED OR SLOPED AS NECESSARY FOR THE SAFETY OF WORKMEN AND PROTECTION OF OTHER UTILITIES IN ACCORDANCE WITH APPLICABLE LOCAL, STATE AND FEDERAL REGULATIONS.

CONSTRUCTION SEQUENCE:
1. PLACE BEDDING MATERIAL. SHAPE TO MATCH PIPE, REMOVE MATERIAL FOR BELLS
2. COMPACT OUTER BEDDING
3. INSTALL PIPE TO LINE AND GRADE
4. PLACE AND COMPACT THE HAUNCH AREA TO SPRINGLINE
5. COMPLETE BACKFILL TO SPECIFICATIONS.

GENERAL NOTES:
BEDDING THICKNESS t=Do/24, BUT NOT LESS THAN 3" IN ROCK t=Do/12, BUT NOT LESS THAN 6"

IF UNSTABLE TRENCH BOTTOM SUBGRADE CONDITIONS ARE ENCOUNTERED, ADDITIONAL CRUSHED ROCK FOR BEDDING AND EXTENT SHALL BE AS DIRECTED BY THE GEOTECHNICAL ENGINEER.

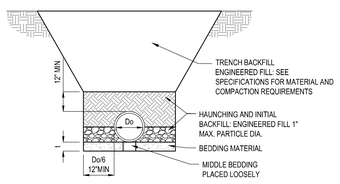

C3 CONCRETE/DUCTILE IRON PIPE BEDDING NO SCALE

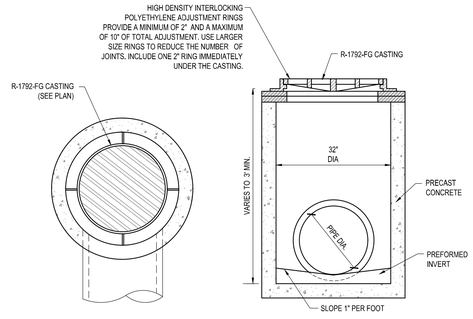

C4 CIRCULAR CATCH BASIN (CCB) NO SCALE

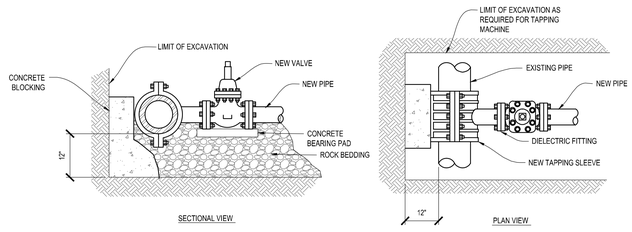

C5 TAPPING SLEEVE AND VALVE NO SCALE

DIMENSION CHART

DIM	MANHOLE TYPE					
	B	C	D	E	F	G
P	48"	60"	72"	84"	96"	102"
B	5"	6"	7"	8"	9"	9.5"
S	6"	8"	8"	8"	8"	12"
C	60"	72"	84"	96"	108"	114"

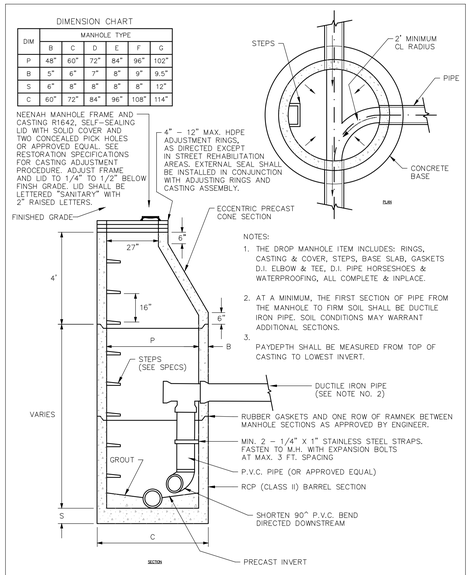

NOTES:

1. THE DROP MANHOLE ITEM INCLUDES: RINGS, CASTING & COVER, STEPS, BASE SLAB, GASKETS D.I. ELBOW & TEE, D.I. PIPE HORSESHOES & WATERPROOFING, ALL COMPLETE & INPLACE.
2. AT A MINIMUM, THE FIRST SECTION OF PIPE FROM THE MANHOLE TO FIRM SOIL SHALL BE DUCTILE IRON PIPE. SOIL CONDITIONS MAY WARRANT ADDITIONAL SECTIONS.
3. PAYDEPTH SHALL BE MEASURED FROM TOP OF CASTING TO LOWEST INVERT.

City of minnetonka | SANITARY SEWER INSIDE DROP MANHOLE | SCALE: NOT TO SCALE | STD PLATE NO: 430 | APPROVED: 4/2000 | REVISED: 3/2015

A1 SANITARY SEWER INSIDE DROP MANHOLE NO SCALE

SPECIFICATIONS
1. 4" inlet/outlet Sch. 40, Plain End(No-Hub)
2. Liquid capacity: 275 Gallons (36.8 cu ft)
3. Flammable Liquid capacity: 141.4 gallons
4. Sand capacity : 116.5 gallons
5. Unit weight w/std. covers: 230 lbs.
6. Maximum operating temperature 190°F continuous.
7. Highway rated cover: 16,000 lb. capacity
8. Seamless molded polyethylene tank.

NOTES
1. For gravity drainage applications only. Do not use for pressure applications.
2. Seamless high density polyethylene tank.
3. Unit supplied with built-in adapters for up to 6" of adjustability. Additional riser(s) available for deeper burial depth.
4. Cover placement allows full access to tank for proper maintenance.
5. Narrow footprint allows clearance through doorways and down stairwells.
6. Outlet diptube is removable to inspect/clean piping.
7. For on the-floor or buried applications.

ENGINEER SPECIFICATION GUIDE
Striem Flammable Liquid Interceptor Model # FLI-275 shall be lifetime guaranteed and made in the USA of seamless, rotationally-molded High Density Polyethylene. Interceptor shall be furnished for above or below grade installation, with field adjustable riser system, and vent connections. Interceptor capacity shall be 147.5 gallons of flammable liquids and 105 gallons of sediment. Cover shall provide water/gas-tight seal and have minimum 16,000 lbs load capacity.

OPTIONS:
- H20 Rated Cast Iron Covers
- Pedestrian rated cover; 2,000 lb capacity
- Teleglide field adjustable risers for extending covers to grade
- Male pipe thread connections
- 6" Plain end pipe connections (Inlet / Outlet Only)
- High water anchor kit
- Clean Sweep coalescing media

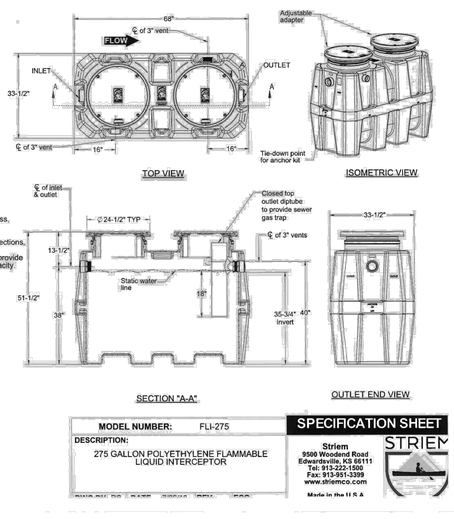

MODEL NUMBER:	FLI-275
DESCRIPTION:	275 GALLON POLYETHYLENE FLAMMABLE LIQUID INTERCEPTOR

SPECIFICATION SHEET

Striem
9500 Woodend Road
Edwardsville, KS 66111
Tel: 913-222-1500
Fax: 913-951-3399
www.striemco.com
Made in the U.S.A.

PROPRIETARY AND CONFIDENTIAL
THE INFORMATION CONTAINED IN THIS DRAWING IS THE SOLE PROPERTY OF STRIEM, LLC. ANY REPRODUCTION IN PART OR AS A WHOLE WITHOUT THE WRITTEN PERMISSION OF STRIEM, LLC IS PROHIBITED.

A3 SANITARY SEWER INTERCEPTOR NO SCALE

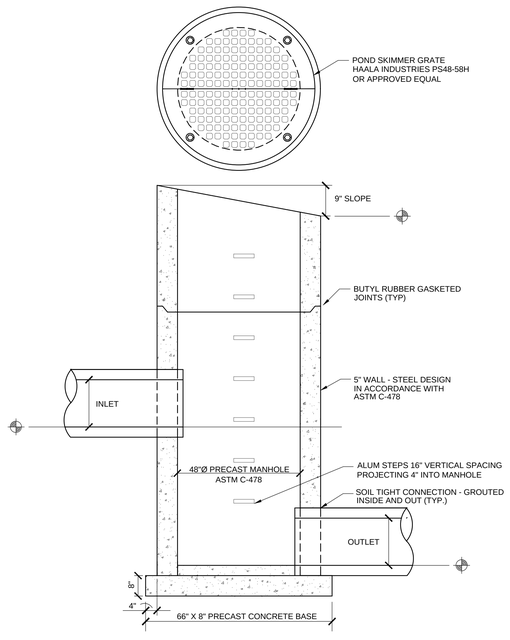

A5 OUTLET CONTROL STRUCTURE NO SCALE

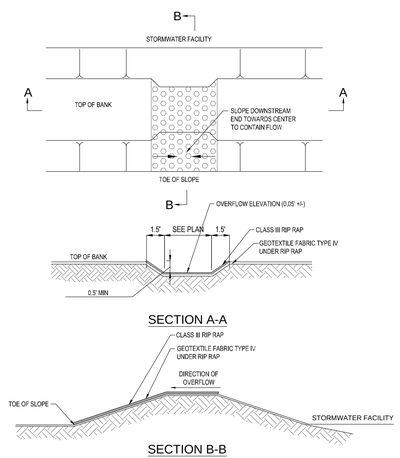

A6 OVERFLOW WEIR NO SCALE

NEW REGIONAL MEDICAL EXAMINER FACILITY
MINNETONKA, MN

HENNEPIN COUNTY
A 2208 GOVERNMENT CENTER
300 SOUTH 6TH STREET
MINNEAPOLIS, MN 55487
COUNTY PROJECT NO. 1002306

LEO A DALY
730 SECOND AVE SOUTH, SUITE 1300,
MINNEAPOLIS, MN 55402-2455
T: 612.338.8741

LABORATORY EQUIPMENT DESIGN
MCCLAREN, WILSON & LAWRIE
11798 N LAKERIDGE PKWY.,
ASHLAND, VA 23005 T: 804-228-7473

CIVIL ENGINEERING
ELAN DESIGN LAB
901 NORTH THIRD STREET, SUITE 120.
MINNEAPOLIS, MN 55401 T: 612-260-7980

LANDSCAPE ARCHITECTURE
DAMON FARBER
401 SECOND AVE NORTH, SUITE 410,
MINNEAPOLIS, MN 55401 T:612-332-7522

TELECOMMUNICATIONS ENGINEERING
TRUE NORTH CONSULTING
140 THIRD STREET SOUTH,
STILLWATER, MN 55082 T:651-705-1231

KEY PLAN

REVISIONS

NO.	DESCRIPTION	DATE

FILE LOG

ACTIVITY	BY
Manager	MJV
Design	SMJ
Draw	LTH
Check	LAD

STAMP

NOT FOR CONSTRUCTION

CITY SUBMITTAL

ELAN Project No. LAD18010
08/15/2019

UTILITY DETAILS

CK521

VOLUME 1

CITY SUBMITTAL

Copyright © 2018 LEO A DALY Company

Ordinance No. 2019-

An ordinance amending the existing master development plan for the Hennepin County Home School property located at 14300 Co. Rd. 62

The City Of Minnetonka Ordains:

Section 1.

1.01 This ordinance hereby amends the existing master development plan. (Project 95063.18a).

1.02 The property covered by this amendment is located at 14300 Co. Rd. 62 and is legally described in Exhibit A.

Section 2.

2.01 This ordinance is based on the following findings:

1. The proposal would meet the required standards and ordinances for a site and building plan approval.

Section 3.

3.01 Approval is subject to the following conditions:

1. The site must be developed and maintained in substantial conformance with the following plans, unless modified by the conditions below:

   LIST PLANS AND DATES

   The above plans are hereby adopted as the master development plan and as final site and building plans.

2. LIST ADDITIONAL CONDITIONS

Section 4. A violation of this ordinance is subject to the penalties and provisions of Chapter XIII of the city code.

Section 5. This ordinance is effective immediately.

Adopted by the city council of the City of Minnetonka, Minnesota, on Oct. 7, 2019.

_____
Brad Wiersum, Mayor

ATTEST:

_____
Becky Koosman, City Clerk

ACTION ON THIS ORDINANCE:

Date of introduction: Sept. 16, 2019
Date of adoption:
Motion for adoption:
Seconded by:
Voted in favor of:
Voted against:
Abstained:
Absent:
Ordinance adopted.

Date of publication:

I certify that the foregoing is a correct copy of an ordinance adopted by the city council of the City of Minnetonka, Minnesota at a regular meeting held on Oct. 7, 2019.

_____
Becky Koosman, City Clerk

Date:

EXHIBIT A